ERC 214-216i /zi /bi

01.19

Operating instructions

en-GB

51744410

07.25

ERC 214-216i
ERC 214-216zi
ERC 214-216bi

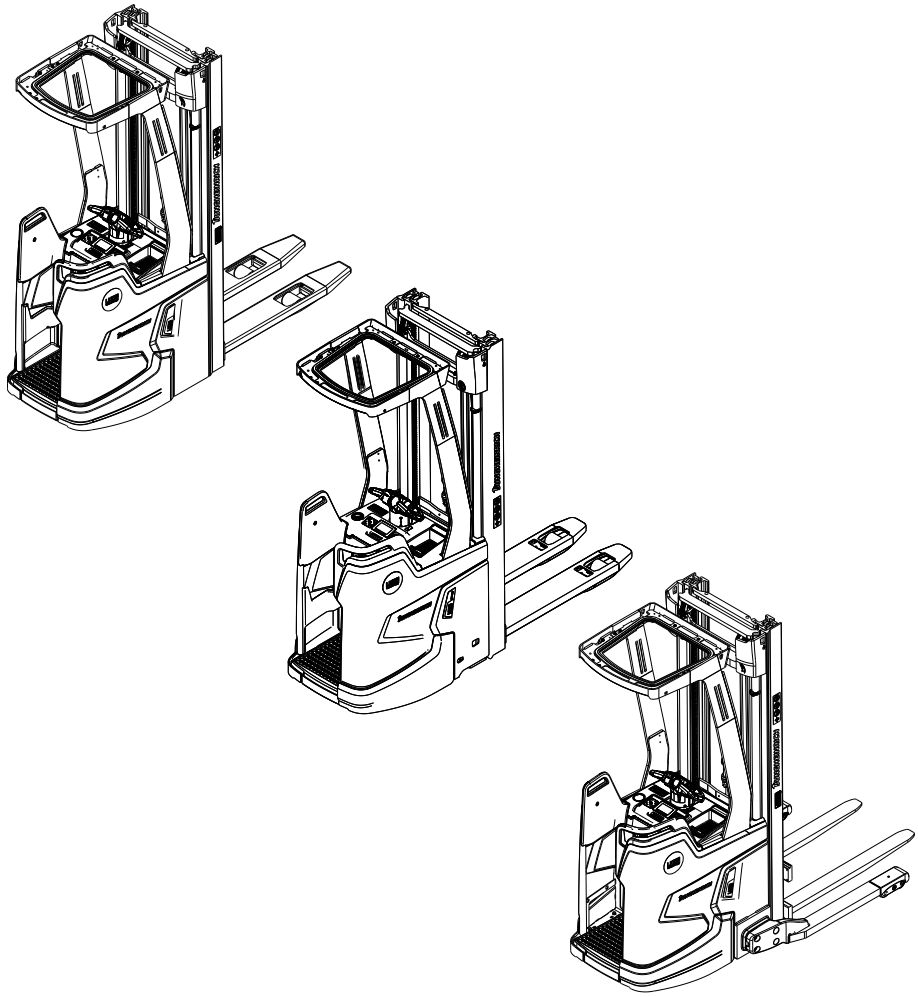

JUNGHEINRICH

Declaration of Conformity

CE

Manufacturer

Jungheinrich AG, 22039 Hamburg, Germany

Description
Industrial truck

Type	Option	Serial no.	Year of manufacture
ERC 214-216i ERC 214-216zi ERC 214-216bi			

On behalf of

Date

EU DECLARATION OF CONFORMITY

The undersigned hereby declare that the powered truck described in detail complies with the current versions of European Directives 2006/42/EG (Machinery Directive) and 2014/30/EU (Electromagnetic Compatibility - EMC). The manufacturer is authorised to compile the technical file.

UK CA

JUNGHEINRICH

Declaration of Conformity (○)

Product:	ERC 214-216i /zi /bi Serial number/type number
Manufacturer:	Jungheinrich Aktiengesellschaft 22039 Hamburg, Germany
UK representative:	Jungheinrich UK Ltd Sherbourne House Sherbourne Drive Tilbrook Milton Keynes MK7 8HX

Authorised to compile documentation:

The manufacturer is authorised to compile the technical documentation and its representative is authorised to make documentation available upon reasoned request for a period of at least 10 years from the date of first placement of the product on the UK market.

The manufacturer bears sole responsibility for issuance of this Declaration of Conformity.

The subject of the Declaration as outlined above satisfies the applicable UK legislation:

Supply of Machinery (Safety) Regulations 2008 No. 1597

and

Electromagnetic Compatibility Regulations 2016 No. 1091

Signed for and on behalf of:

Jungheinrich Aktiengesellschaft

07.25 en-GB

Foreword

Notes on the operating instructions

The present ORIGINAL OPERATING INSTRUCTIONS are designed to provide sufficient instruction for the safe operation of the industrial truck. The information is provided clearly and concisely. The chapters are arranged by letter and the pages are numbered continuously.

The operator manual details different industrial truck models. When operating and servicing the industrial truck, make sure that the particular section applies to your truck model.

Our trucks are subject to ongoing development. We reserve the right to alter the design, equipment and technical features of the system. No guarantee of particular features of the truck should therefore be assumed from the present operating instructions.

Safety notices and text mark-ups

Safety instructions and important explanations are indicated by the following graphics:

⚠ DANGER!

Indicates an extremely hazardous situation. Failure to comply with this instruction will result in severe irreparable injury and even death.

⚠ WARNING!

Indicates an extremely hazardous situation. Failure to comply with this instruction may result in severe irreparable injury and even death.

⚠ CAUTION!

Indicates a hazardous situation. Failure to comply with this instruction may result in slight to medium injury.

NOTICE

Indicates a material hazard. Failure to comply with this instruction may result in material damage.

➔ Used before notices and explanations.

●	Indicates standard equipment
○	Indicates optional equipment

Copyright

Copyright of these operating instructions remains with JUNGHEINRICH AG.

Jungheinrich Aktiengesellschaft

Friedrich-Ebert-Damm 129
22047 Hamburg - Germany

Tel: +49 (0) 40/6948-0

www.jungheinrich.com

07.25 en-GB

Contents

A Correct Use and Application 11

1 General 11
2 Correct application 11
2.1 Lifting Passengers 12
3 Approved application conditions 13
3.1 Instructions for trucks with lithium-ion batteries 15
3.2 Internal Operation Combined with Brief External or Cold Store Operation (●) 16
3.3 Internal Operation in Cold Stores with Cold Store Equipment (○) 17
3.4 Wind loads 17
4 Proprietor responsibilities 18
5 Adding attachments and/or optional equipment 18
6 Removal of components 18
7 Parameters 18

B Truck Description 19

1 Application 19
2 Truck models and rated capacity 19
3 Travel direction definition 20
4 Assemblies and Functional Description 21
4.1 Assembly Overview 21
4.2 Overview of optional components 23
4.3 Functional Description 31
4.4 Protective and safety equipment 35
5 Technical Specifications 38
5.1 Performance data 39
5.2 Travel Programs 46
5.3 Gradeability 48
5.4 Dimensions 49
5.5 Weights 55
5.6 Rated Capacity of Stand-on Platform 55
5.7 Wheels 56
5.8 EN norms 57
5.9 Specifications according to RED guideline (Radio Equipment Directive) for radio units 58
5.10 Electrical Requirements 59
5.11 Power supply of on-board charger (○) 59
5.12 Safety of trucks 60
5.13 USB charging module 60
6 Identification Points and Data Plates 61
6.1 Indication Points 61
6.2 Data plate 65
6.3 Truck capacity plate 66
6.4 Capacity plate for stacking and transport operation 70
6.5 Capacity plate for stacking, transport and double-deck operation 71

C Transport and Commissioning 73

1 Lifting by crane 73

2 Transport ... 75
3 Using the Truck for the First Time ... 76

D Battery - Servicing, Recharging, Replacement ... 79

1 Safety regulations for handling lithium-ion batteries ... 80
1.1 Correct application ... 80
1.2 Maintenance ... 80
1.3 Disposal ... 81
1.4 Touch voltage hazard ... 82
1.5 Measures for fire fighting ... 82
2 Battery types ... 83
2.1 Integrated Modular Lithium-Ion Battery ... 83
3 Usage and ambient conditions ... 84
4 Lithium-ion battery data plate ... 85
4.1 Safety and warning information ... 86
5 Exposing the battery ... 87
6 Removing or installing the battery ... 87
7 Deeply discharged batteries ... 87
8 Charging the battery ... 88
8.1 Activating the Lithium-Ion Battery ... 89
8.2 Charging the battery with a stationary battery charger ... 90
8.3 Charging the battery with an on-board charger ... 93

E Operation ... 97

1 Safety Regulations for the Operation of Forklift Trucks ... 97
2 Displays and controls ... 99
2.1 Key switch ... 102
2.2 Tiller ... 103
2.3 Touch-Mode Control Unit ... 103
2.4 Display unit with 4-inch display ... 105
3 Preparing the Truck for Operation ... 119
3.1 Checks and Operations to Be Performed Before Starting Daily Work ... 119
3.2 Setting up the operator position ... 120
3.3 Preparing the truck for operation ... 122
3.4 Visual inspections and activities to be performed after establishing operational readiness ... 124
3.5 Parking the truck securely ... 125
4 Working with the truck ... 127
4.1 Safety regulations for travel mode ... 127
4.2 How to act in hazardous situations ... 132
4.3 Operator platform ... 132
4.4 Automatic braking ... 133
4.5 Emergency Disconnect ... 134
4.6 Emergency stop ... 135
4.7 Travel ... 136
4.8 Steering ... 140
4.9 Brakes ... 142
4.10 Raising or Lowering the Load Handler ... 147
4.11 Lifting, transporting and depositing loads ... 152
4.12 Use as a Lift Work Table ... 164
5 Troubleshooting ... 165
5.1 Truck in General ... 166

5.2 Battery ... 169
6 Load handler emergency lowering ... 171
7 Moving a truck without its own drive system ... 172
7.1 Drive Wheel Brake Assembly and Disassembly ... 172
8 Optional Equipment ... 174
8.1 Display unit with 6-inch display ... 174
8.2 Floor-Spot (O) ... 178
8.3 Touch Mode ... 180
8.4 Keyless Access System ... 181
8.5 positionCONTROL ... 195
8.6 operationCONTROL ... 199
8.7 Lift Limit (○) ... 201
8.8 zoneCONTROL ... 202
8.9 Fleet Management System ... 202
8.10 Forks ... 203

F Truck maintenance ... 207

1 Spare Parts ... 207
2 Operational Safety and Environmental Protection ... 208
3 Maintenance Safety Regulations ... 209
3.1 Welding ... 209
3.2 Working on the electrical system ... 210
3.3 Consumables and used parts ... 210
3.4 Wheels ... 210
3.5 Hydraulic system ... 211
3.6 Lift Chains ... 212
3.7 Energy saving components ... 212
4 Lubricants and Lubrication Schedule ... 213
4.1 Handling consumables safely ... 213
4.2 Consumables ... 215
4.3 Lubrication Schedule ... 216
5 Maintenance and repairs ... 217
5.1 Preparing the truck for maintenance and repair work ... 217
5.2 Jacking up the truck ... 218
5.3 Disassembling or assembling the front panel ... 222
5.4 Cleaning ... 223
5.5 Checking the hydraulic oil level ... 225
5.6 Checking the attachment and wear of the wheels ... 227
5.7 Checking the electrical fuses ... 229
5.8 Restoring the truck to service after maintenance and repairs ... 230
6 Decommissioning the Industrial Truck ... 230
6.1 Prior to decommissioning ... 230
6.2 Action to be taken during decommissioning ... 230
6.3 Restoring the truck to service after decommissioning ... 230
7 Safety tests to be performed at intervals and after unusual incidents ... 231
8 Final de-commissioning, disposal ... 231
9 Human vibration measurement ... 231

G Maintenance, Inspection and Changing of Maintenance Parts Requiring Replacement ... 233

1 Maintenance Contents ERCz 214i 216i ... 233
1.1 Owner ... 233

1.2 Customer Service 234
2 Maintenance Contents ERC 214/216i 239
2.1 Owner 239
2.2 Customer Service 241
3 Maintenance Contents ERC 214/216 bi 245
3.1 Owner 245
3.2 Customer Service 247

A Correct Use and Application

1 General

The truck must be used, operated and serviced in accordance with these operating instructions. All other types of use are beyond its scope of application and may result in damage to persons, material assets and/or the truck.

2 Correct application

NOTICE

The maximum load and load distance are indicated on the capacity plate and must not be exceeded.
The load must rest on the load handler.
The load must be fully raised, see page 152.

Permissible activities

– Lifting and lowering loads
– Stacking and retrieving loads
– Transporting lowered loads

Prohibited activities

– Travelling with a raised load handler (>500 mm).
– Raising the load handler above 1800 mm in double-deck operation
– Carrying and lifting passengers (see"Lifting Passengers" on page 12).
– Pushing or pulling loads

2.1 Lifting Passengers

⚠ WARNING!

Risk of accident when using a work cage

When working with a work cage, high dynamic forces act on the truck, which can impair its operational stability. When using a work cage, a minimum capacity of 1500 kg is required at the lift height of the work cage.

▶ Use the capacity plate to ensure sufficient capacity at the planned lift height, see page 66.

Lifting passengers with a work cage may be permitted in some countries. This must be verified by the operating company. The following (non-exhaustive) list contains example standards with further information.

– Germany: DGUV information 208-031 (BGI/GUV- 5183) Use of Working Platforms on Industrial Trucks with Mast

– Australia: AS 2359.1 Powered Industrial Trucks, General Requirements; AS 2359.2 Powered Industrial Trucks, Operations

3 Approved application conditions

⚠ WARNING!

Use under extreme conditions

Using the truck under extreme conditions can result in malfunctions and accidents.

▶ Special equipment and authorisation are required if the truck is to be constantly used in extreme conditions, especially in dusty or corrosive atmospheres.

▶ The truck cannot be used in areas at risk of explosion.

▶ In adverse weather conditions (thunder, lightning) the industrial truck must not be operated outside or in endangered areas.

– Operation in industrial and commercial environments.
– Operation only on secure, level surfaces with sufficient capacity.
– Do not exceed the permissible surface and point load limits on the travel routes.
– Operation only on routes that are visible and approved by the operating company.
– Read the instructions in these operating instructions before travelling on slopes and inclines:
  • Truck gradeability – see page 48.
  • Notes on travelling on slopes and inclines – see page 129.

Ground conditions

The condition of the ground on which the truck is used must satisfy the following requirements:

– The ground must be level, secure and have sufficient capacity.
– The ground must be free from oil and grease.
– In accordance with EN 1081, the earthing resistance of the ground must not exceed 1 MΩ.

– The following also applies for stacking:
  • The capacity data specified on the truck applies to horizontal ground that meets the specifications in the table below.

Limit values for deviations from level

Reference	**Limit values (mm) for measuring point distances (m)** [1]				
Finished floors e.g. screed on its own, screed for accommodating floor coverings, floor coverings, tile coverings, smoothed and bonded surfaces	≤ 0.1 m	1 m	4 m	10 m	≥15 m
	2 mm	4 mm	10 mm	12 mm	15 mm

[1] Specifications in accordance with DIN 18202:2019-07 - Table 3 - row 3 - limit values for deviations from level

Changing the application areas and thawing

– The application areas can be changed, but in general this should be minimised due to thawing and possible corrosion.
– Thawing is permissible only if the truck can be subsequently dried thoroughly.

➔ Special equipment and authorisation are required if the truck is to be used continually in conditions of extreme temperature fluctuations or condensing air humidity.

3.1 Instructions for trucks with lithium-ion batteries

⚠ WARNING!

Danger of accidents due to regenerative braking fault

Regenerative braking faults can result in extended stopping distances and accidents, particularly when travelling on inclines. Other persons can be injured in the truck's hazardous area.

- ▶ Keep all persons out of the hazardous area during travel operations.
- ▶ Instruct other people to move out of the hazardous area of the truck. Stop working with the truck if people do not leave the hazardous area.
- ▶ In emergencies, use the service brake for braking.

Equipping the truck with a lithium-ion battery can affect the permissible operating conditions. The operating conditions of the truck and the various battery types are listed in this section.

- Travel and hydraulic functions: The usable battery capacity and power are reduced at low temperatures. If the lithium-ion battery is in the low-temperature range, the lift function may be impaired and regenerative braking with the coasting brake may not function correctly.
- High and low ambient temperatures increase the charging time of the lithium-ion battery.
- The permissible application range of the lithium-ion battery does not increase the permissible application range of the truck.

A notification symbol appears on the display unit when the temperature of the lithium-ion battery is outside the permissible range – see page 105.

3.2 Internal Operation Combined with Brief External or Cold Store Operation (●)

In addition to the permissible operating conditions in industrial and commercial environments, the truck can also be used in outdoor environments, cool stores and fresh food areas. Secure parking is only permissible indoors or in a cold store environment.

– Use in a cold store (below -10 °C) is prohibited.

Operating and ambient conditions	
Permissible temperature range	-10 °C to +40 °C
Temperature range for secure parking	+5 °C to +40 °C
Minimum temperature for charging	5 °C
Maximum relative air humidity	95% non-condensing

3.3 Internal Operation in Cold Stores with Cold Store Equipment (○)

NOTICE

Battery damage at low state of charge and at low temperatures

A low state of charge and increasing cooling can damage the battery. To avoid damage, observe the following:

▶ If the battery charge is low, do ***not*** use the truck in temperatures from -28 °C to -5 °C.

▶ If the battery charge is low, avoid using the truck in temperatures from -5 °C to +5 °C ***where possible***.

▶ Charge the battery – see page 13.

In addition to the permissible operating conditions in industrial and commercial environments, the truck remains primarily in cold stores. The truck should only leave the cold store briefly to hand over a load.

– In cold store areas below -10 °C, the truck must be operated **continuously** and must not be parked securely for more than 15 minutes.

Operating and ambient conditions	
Permissible temperature range	-28 °C to +25 °C
Temperature range for secure parking	+5 °C to +40 °C
Minimum temperature for charging	5 °C
Maximum relative air humidity	95% non-condensing

3.4 Wind loads

Wind forces can affect the stability of a truck when lifting, lowering and transporting loads with large surface areas.

Light loads must be especially secured when they are subjected to wind forces. This will prevent the load from sliding or falling.

Stop the truck in both cases.

4 Proprietor responsibilities

For the purposes of the present operating instructions the “operating company” is defined as any natural or legal person who either uses the industrial truck himself, or on whose behalf it is used. In special cases (e.g. leasing or renting) the proprietor is considered the person who, in accordance with existing contractual agreements between the owner and user of the industrial truck, is charged with operational duties.
The proprietor must ensure that the industrial truck is used only for the purpose it is intended for and that danger to life and limb of the user and third parties are excluded. Furthermore, accident prevention regulations, safety regulations and operating, servicing and repair guidelines must be followed. The operating company must ensure that all users have read and understood these operating instructions.

NOTICE

Failure to comply with the operating instructions invalidates the warranty. The same applies if improper work is carried out on the truck by the customer or third parties without the permission of the manufacturer.

5 Adding attachments and/or optional equipment

The mounting or installation of additional equipment which affects or enhances the performance of the industrial truck requires the written permission of the manufacturer. Local authority approval may also need to be obtained.
Local authority approval however does not constitute the manufacturer’s approval.

6 Removal of components

It is forbidden to modify or remove truck components, particularly protective and safety equipment.

➔ If in doubt, contact the manufacturer's customer service department.

7 Parameters

➔ The truck parameters can be changed only by the manufacturer's customer service department.

B Truck Description

1 Application

The industrial truck is an electric pallet truck with a fixed standing platform. It has been designed for stacking and retrieving loads and for transporting loads on even ground.

Version ERC 214zi-216zi:
The support arm lift increases the ground clearance when transporting on uneven ground.

Version ERC 214bi-216bi:
The side booms improve standing stability and allow the transport of cross-pallets.

➔ The rated capacity is shown on the data plate. The capacity with respect to lift height and load centre distance is indicated on the capacity plate.

2 Truck models and rated capacity

The rated capacity depends on the model. The rated capacity can be derived from the model name.

ERC 214-216i /zi /bi

ERC	Type
2	Series
16	Rated capacity x 100 kg
i	Truck equipped with lithium-ion battery ex works
z	Truck equipped with initial lift
b	Straddle

➔ The rated capacity is not generally the same as the permissible capacity. The capacity can be found on the capacity plate attached to the truck.

3 Travel direction definition

The following determinations have been made for travel direction specification:

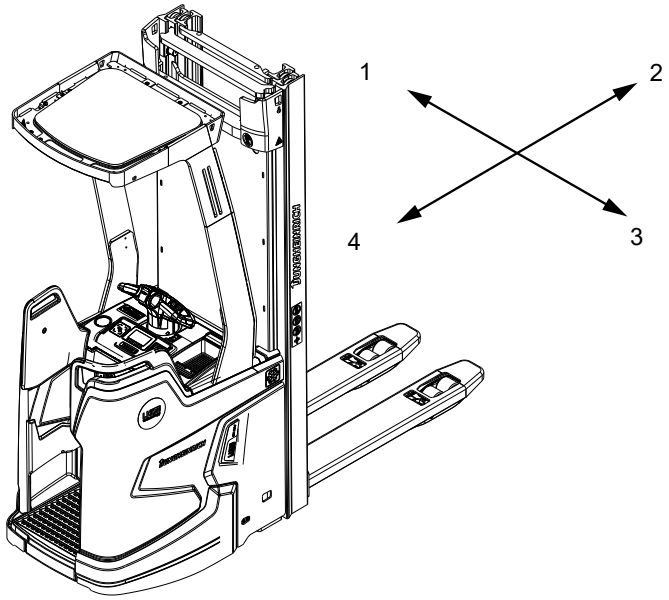

Item	Description
1	Left
2	Load direction
3	Right
4	Drive direction

4 Assemblies and Functional Description

4.1 Assembly Overview

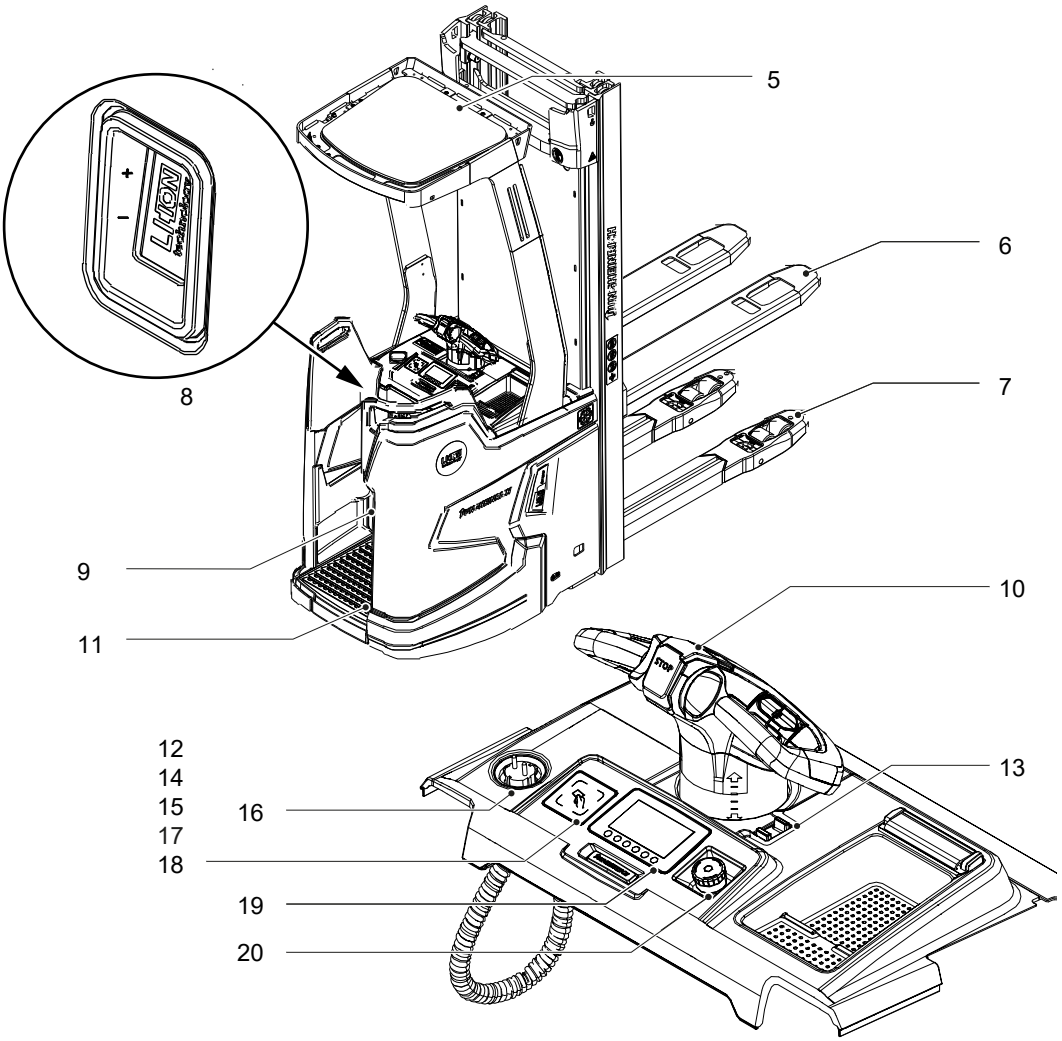

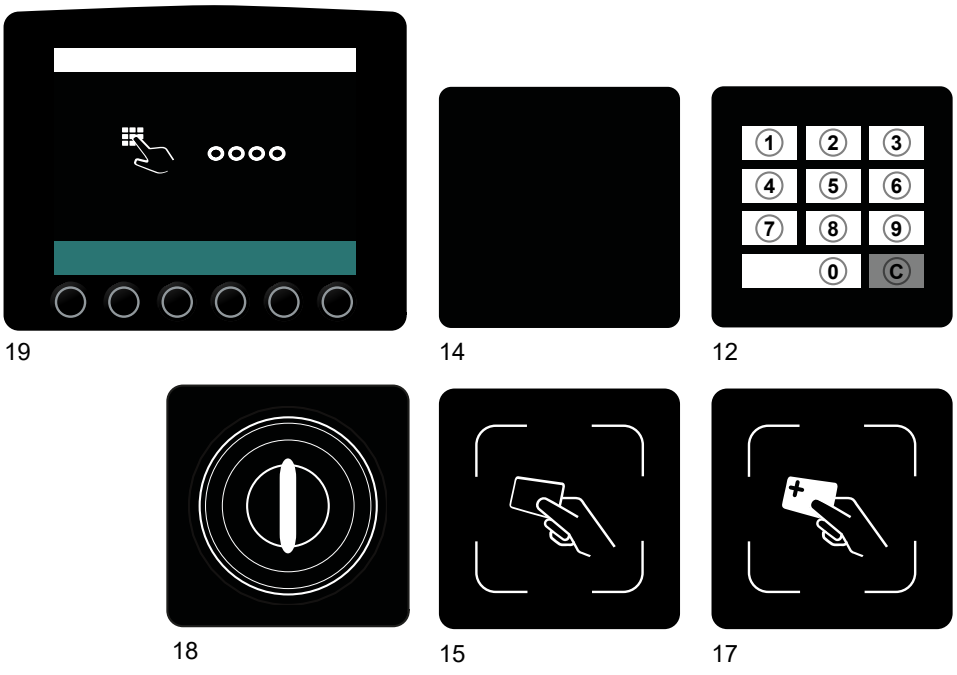

Item		Description
5	○	Overhead guard
6	●	Load fork
7	●	Support arms
8	●	Comfort charging socket
9	●	Front panel
10	●	Tiller
11	●	Operator platform
12	○	Keypad
13	●	Tiller height adjustment
14	○	Panel
15	○	Transponder reader
16	○	Mains plug (on-board charger)
17	○	Transponder reader Plus
18	●	Key switch
19	●	Display unit with 4-inch display
20	●	Emergency disconnect switch

4.2 Overview of optional components

➔ The installation position of the optional components is adjusted to the respective equipment and operating condition of a truck.

4.2.1 Mast cover

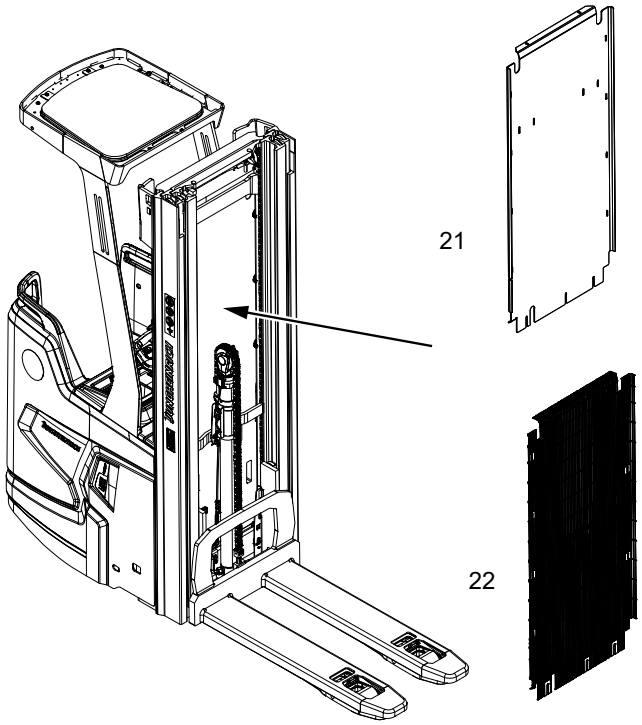

Item		Description
21	●	Protective screen panel (not suitable for cold store operation)
22	○	Protective screen

4.2.2 Load backrest

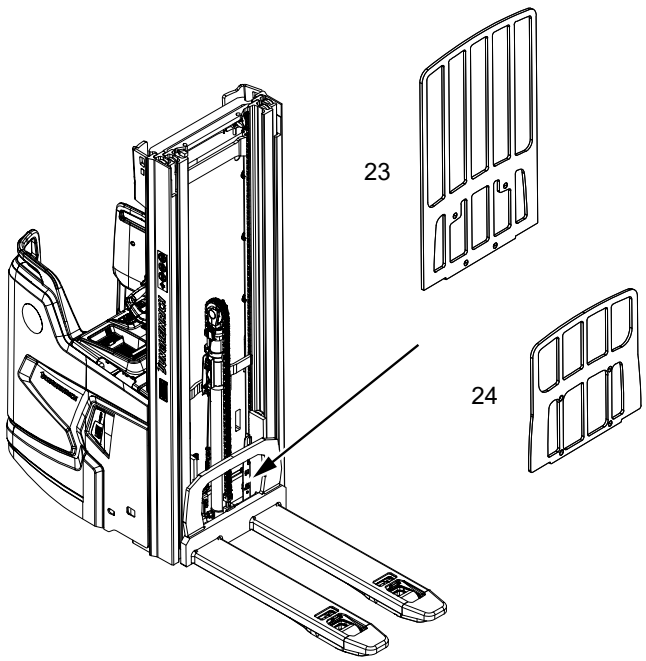

Item		Description
23	○	Load backrest, large
24	○	Load backrest, small

➔ A load backrest is part of the standard equipment of the truck. Trucks without a load backrest must be fitted with an overhead guard.

4.2.3 Overhead guard

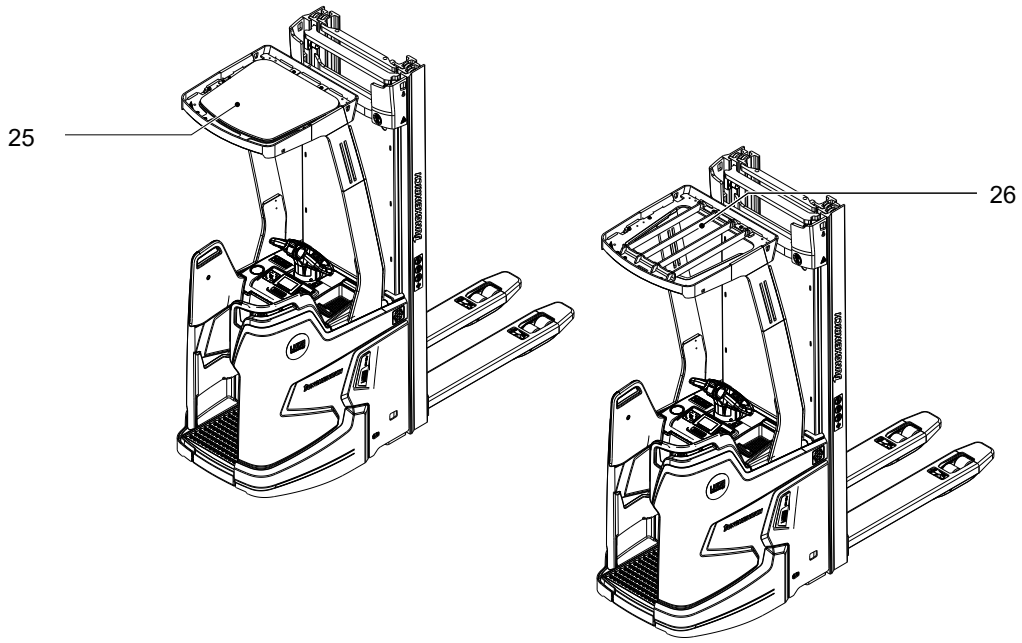

Item		Description
25	○	Overhead guard with panel
26	○	Overhead guard with protective struts

➔ An overhead guard is part of the optional equipment of the truck. Trucks without an overhead guard must be fitted with a load backrest.

4.2.4 Options for Truck without Overhead Guard

On the upper options bracket

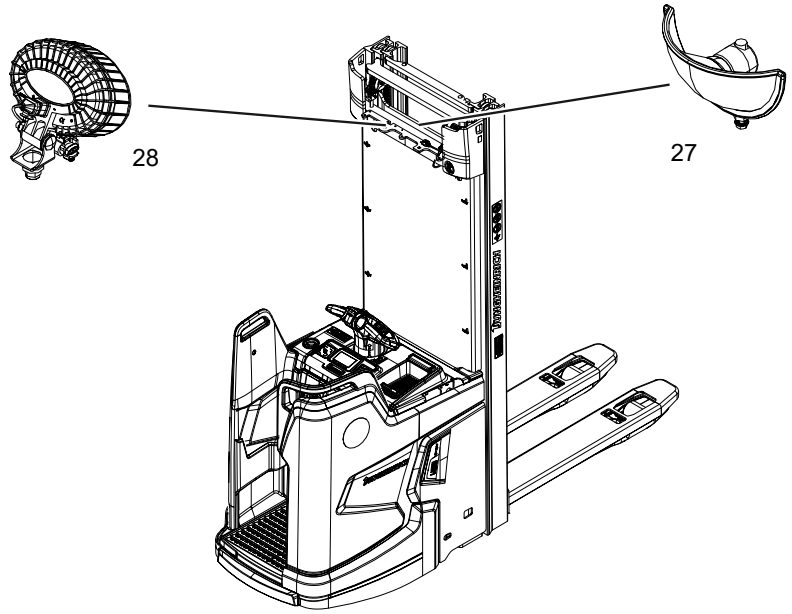

Item		Description
27	○	Wide-angle mirror
28	○	Red or blue LED light (Floor-Spot)

On the lower options bracket

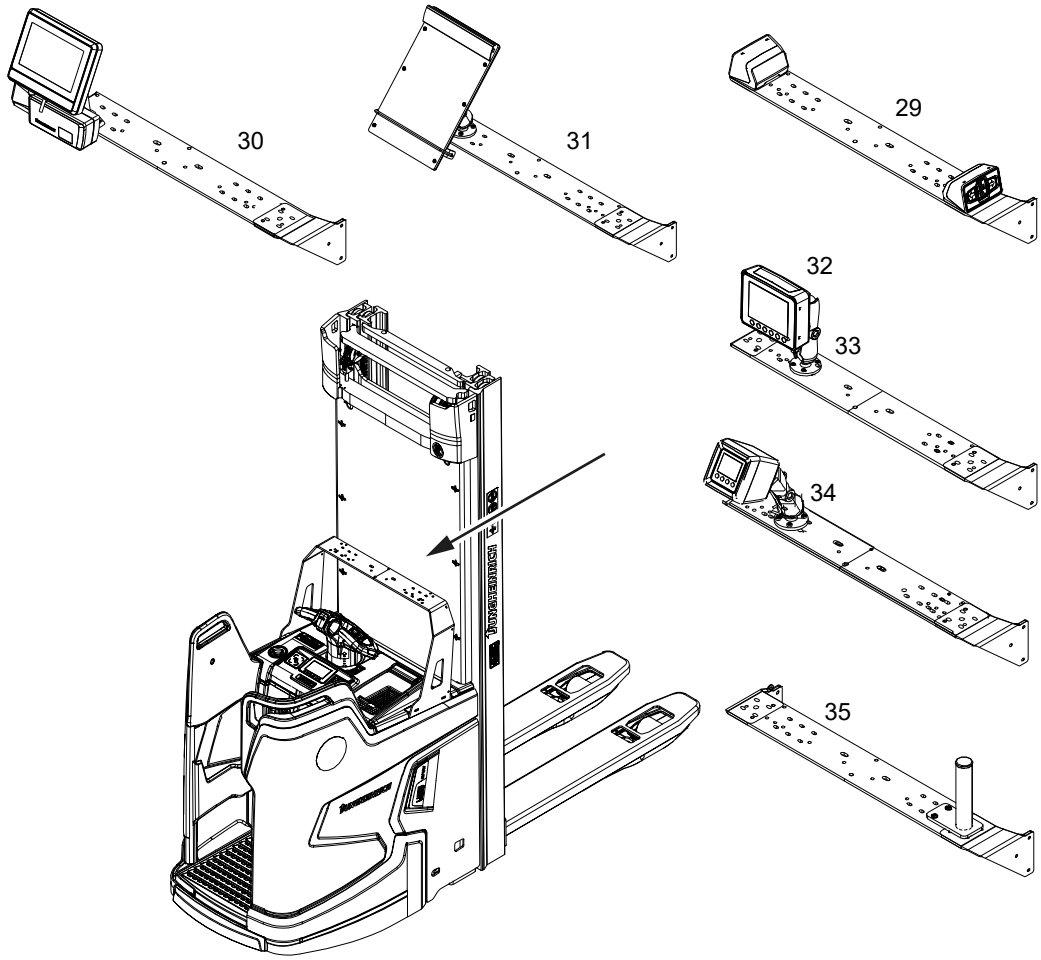

Item		Description
29	○	Touch-mode units
30	○	Display and truck tag for zoneCONTROL
32	○	Display unit with 6-inch display on RAM mount holder
33	○	RAM mount holder (shown with display unit)
34	○	Pre-Op Check display unit
38	○	DIN A4 writing board on RAM mount holder
39	○	Shrink wrap holder

The Pre-Op Check display unit is always located on the left. The Pre-Op display unit cannot be combined with zoneCONTROL.

4.2.5 Options for Truck with Overhead Guard

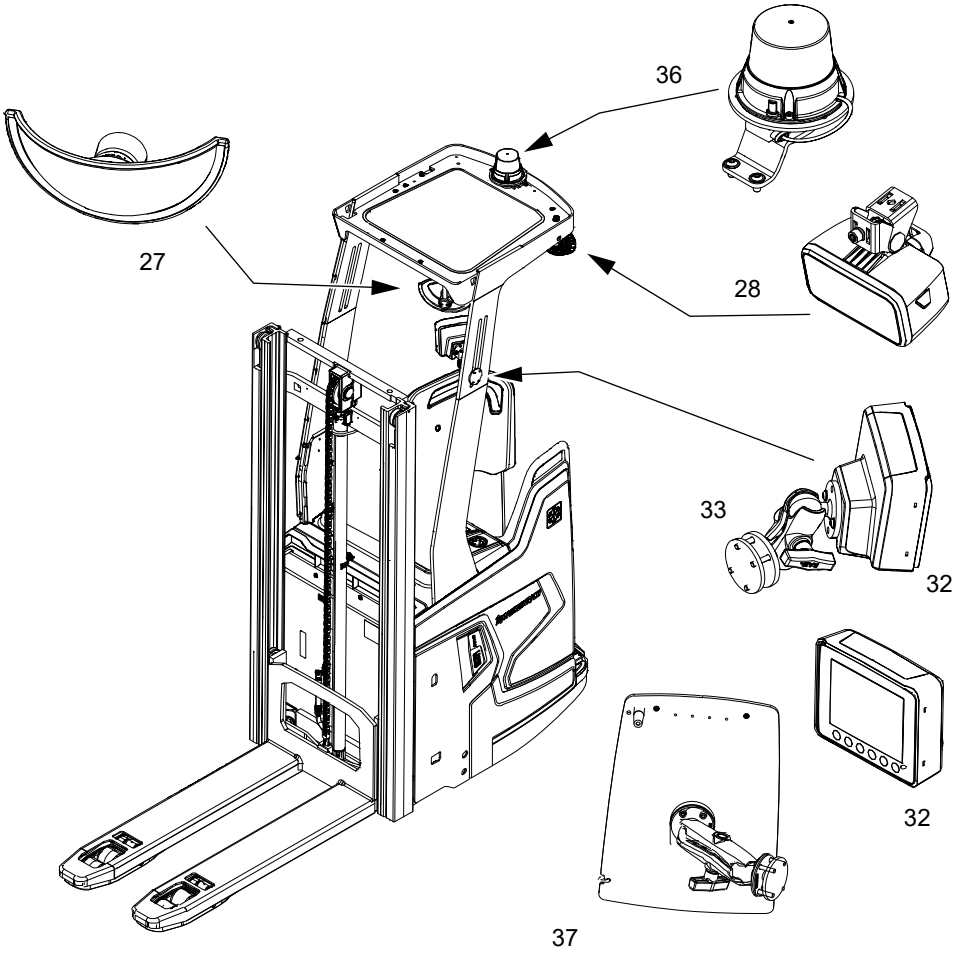

On overhead guard

Item		Description
28	○	Red or blue LED light (Floor-Spot)
27	○	Wide-angle mirror
36	○	Beacon

On the strut of the overhead guard

Item		Description
32	○	Display unit with 6-inch display on RAM mount holder
33	○	RAM mount holder (shown with display unit)
37	○	DIN A4 writing board on overhead guard (OHG)

On the lower options bracket

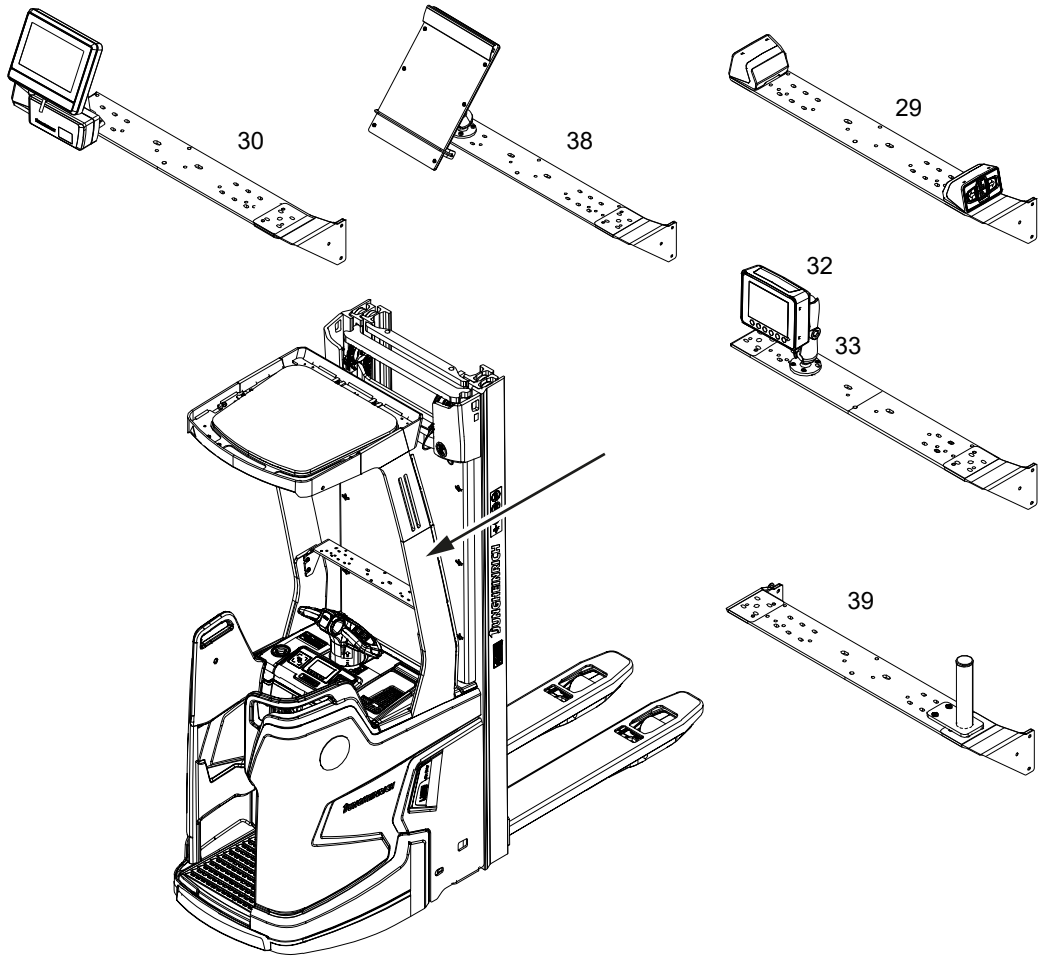

Item		Description
29	○	Touch-mode units
30	○	Display and truck tag for zoneCONTROL
32	○	Display unit with 6-inch display on RAM mount holder
33	○	RAM mount holder (shown with display unit)
38	○	DIN A4 writing board on RAM mount holder
39	○	Shrink wrap holder

4.2.6 Stand-on Platform Options

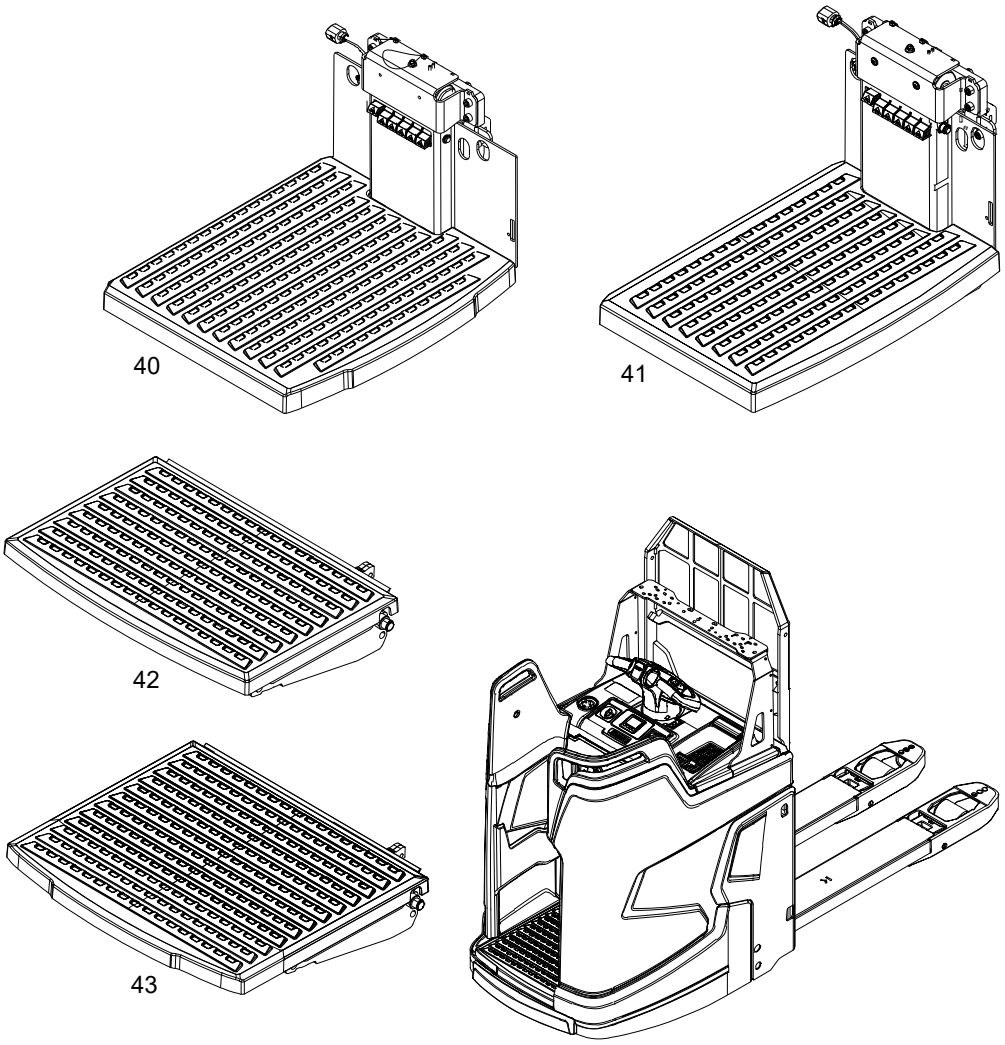

➔ The illustrations show a Jungheinrich ERE 225i industrial truck as an example.

Item		Description
40	○	Stand-on platform, adjustable suspension
41	○	Stand-on platform, adjustable suspension, compact
42	○	Stand-on platform, compact
43	●	Stand-on platform

➔ On stand-on platforms with adjustable suspension (○), the firmness of the suspension can be adapted to the operator weight. Above the platform, there are up to six gas pressure springs, which can be actuated via levers to adapt to the operator's weight.

4.3 Functional Description

Drive system

A fixed AC three-phase motor actuates the drive wheel via a transmission. The electronic traction controller ensures stepless speed regulation of the drive motor and hence smooth starting, powerful acceleration, and electronically controlled braking with energy recovery.

Electrical system

The truck has an electronic traction controller. The truck electrical system operates with a rated operating voltage of 24 Volt.

Travel programs

There are multiple travel programs to choose from with preset accelerations and travel speeds. The travel programs have different properties. Further information on the various travel speeds can be found in the technical specifications, see page 46.

➔ Depending on the truck configuration, one travel program can be fixed. In this case, the travel program can be changed only by the manufacturer's customer service department.

Tiller

The driver steers with an ergonomic tiller. All travel and lift operations can be performed sensitively without having to change grip. The tiller has a steer angle of ±50°, which results in a steering angle at the drive wheel of ±90° due to the progressive electric steering.

The ergonomic tillers enable non-fatigue operation for sensitive and gradual travel and hydraulics movements.

Tiller height adjustment

Tiller height adjustment allows the operator to adjust the height of the tiller to suit ergonomic requirements.

Mast

The high-strength steel sections are narrow, enabling excellent visibility of the load handler. The lift rails and the load handler run on permanently lubricated and thus maintenance-free inclined rollers.

Free lift

When equipped with a triple telescopic mast (DZ) (●) a short, centre-mounted free lift cylinder initially lifts the load handler (free lift) without changing the overall height of the truck.

Hydraulic system

"Lifting" and "lowering" are activated via the "lift" and "lower" buttons. Pressing the "lift" button starts the pump unit, supplying hydraulic oil from the hydraulic reservoir to the lift cylinder.

Hour meter

Service hours are counted while the truck is operational and the operator is standing on the platform. On trucks with side inching (○), the operating hours are also counted if the truck is operational and a touch mode button is pressed.

USB charging module (○)

The USB charging module is used as a power supply for external devices.

➔ It is not possible to access the CAN data bus of the truck via the USB charging module.

Display unit with 4-inch display (●)

The display unit provides the operator with important information such as service hours, battery capacity and event messages and enables control of the truck functions. The display unit with 4-inch display is integrated into the dashboard panel.

Display unit with 6-inch display (○)

The optional display unit with 6-inch display serves as an additional display for the assistance systems and simplifies control of the assistance and basic functions of the truck.

Wide-angle mirror (○)

The wide-angle mirror makes it easier for the operator to monitor the area around the truck.

"Soft lifting and lowering" function (○)

On trucks with the "soft lifting and lowering" function, the load fork stops more gently in a given position than in normal operation.

Automatic lower sequence of support arm lift (○)

➔ ERC 214zi-216zi only

With the support arm lift raised, loads can be stacked and retrieved with the load fork up to a lift height of 2200 mm. For higher lift heights, the support arm lift must be lowered.

On trucks with the "automatic lower sequence of support arm lift" function (○), the support arms are automatically lowered as of a load fork lift height of 2200 mm when the "raise load fork" button remains depressed.

Tiller vibration function (○)

If the truck features the operationCONTROL assistance system, it can also be equipped with the tiller vibration function. In this case, the tiller tangibly vibrates shortly before a load leaves the permissible area according to the load chart.

This provides haptic feedback to the operator in addition to the visual and acoustic warning issued via the control panel and the transmitter.

Soft landing (○)

The "soft landing" feature reduces the lowering speed of the load just before it reaches the ground (approx. 100 - 300 mm).

Double-deck function (○)

The double-deck function allows two pallets to be picked up and transported at the same time.

Beacon (○)

The beacon improves truck visibility and provides protection at risk points.

Lift limit (○)

On trucks with lift limit, the load fork stops automatically when the lift height selected by the operating company is reached during a lifting operation.

➔ On trucks with the corresponding specification, the lift limit can be bypassed – see page 201.

zoneCONTROL (○)

zoneCONTROL is a radio-based assistance system. It comprises a stationary radio anchor, a mobile component on the truck including display and a module for personnel. As well as warnings about trucks and personnel in blind spots, transport hubs can also be regulated such that a high level of truck traffic in this area causes the maximum speed to be reduced to slow travel.

The same radio anchor can also be connected to the control unit of a hall gate so that it opens when an authorised truck approaches and remains closed to unauthorised trucks.

➔ Further information: see page 202.

operationCONTROL (○)

The operationCONTROL assistance system offers a range of additional functions to support the operator when working with loads. It displays the lift height, load weight and remaining lift height and issues a warning when the rated or residual capacity is exceeded.

➔ Further information: see page 199.

positionCONTROL (○)

The positionCONTROL assistance system offers a range of additional functions to aid the lifting of loads and to facilitate stacking and retrieving.

Rack height select makes it possible to save and access a series of lift heights. When rack height select is activated, the load handler stops at the selected lift height. The corresponding rack type preselection expands the number of lift height storage slots by grouping four lift heights into a rack type.

Further information: see page 195.

Load-dependent curveCONTROL (●)

The curveCONTROL assistance system helps the operator to operate the truck safely. When cornering, the maximum travel speed is reduced according to the steer angle.

On this truck the assistant system operates on a load-dependent basis, i.e. when stipulating the maximum travel speed for corners, the current load weight is taken into account as well as the steer angle.

driveCONTROL (●)

The driveCONTROL assistance system automatically reduces the maximum travel speed and acceleration of the truck when the load fork is raised (from 2200 mm).

Pre-Op Check (○)

Pre-Op Check allows the operator to perform and log a digitally guided status check for the industrial truck.

Pre-Op Check is an option of the Jungheinrich Fleet Management System (JH FMS) and can be used only in combination with this system.

For further information on the Pre-Op Check, see the "Jungheinrich Fleet Management System" operating instructions.

4.4 Protective and safety equipment

Emergency disconnect switch

Activating the emergency disconnect switch disables all electrical functions in hazardous situations.

➔ Further information: see page 134.

Emergency stop safety concept

If a fault is identified, the emergency stop automatically brakes the truck until it comes to a halt. Control displays on the control and display unit indicate the Emergency Stop. Each time the truck is switched on, the system carries out a self-diagnosis which only releases the parking brake (= emergency stop) if the functionality check was positive.

➔ Further information: see page 135.

Truck contour

An enclosed, smooth truck perimeter with rounded edges ensures safe handling of the truck. The wheels are surrounded by a solid skirt offering collision protection.

➔ The truck contour must not be changed. Contact the manufacturer’s customer service department, if necessary.

Automatic reset of the controls

The travel switch must be held in the travel position to move the truck. When released, the travel switch moves to the neutral position and the truck brakes – see page 143.

The switch for lifting and lowering the load handler must be held in the corresponding position for the entire lifting/lowering process. When released, the switch returns to the neutral position and ends the process – see page 147.

When cornering, the tiller must be held at the point with the required steer angle. When released, the tiller automatically returns to the centre position (straight-ahead travel) – see page 140.

Monitoring of the comfort charging socket

The truck functions are disabled whenever the charge connector of a stationary battery charger is plugged into the truck comfort charging socket. For this purpose, the flap on the comfort charging socket is monitored: when the flap is opened, the truck is immediately disabled.

Stand-on platform

The truck is equipped with an operator platform, which must be occupied for the truck to be operated. Travel mode is enabled only when the stand-on platform is occupied – see page 132. Braking occurs automatically when the stand-on platform is vacated – see page 133.

The stand-on platform with adjustable suspension (○) enables weight-dependent adjustment of the suspension effect in order to increase travel comfort – see page 121.

Slow travel with forks lowered (○)

On trucks with the "slow travel with forks lowered" function, the travel speed is automatically reduced while the forks are lowered in order to reduce wear on the skids.

⚠ CAUTION!

The laser beam of the installed sensors can be hazardous

The sensors installed on the trucks correspond to laser protection class 1. Depending on the sensor, the wavelength is in the invisible range in terms of the human eye. Class 1 laser beams are not hazardous.

▶Do not look into the laser beam!

Foot protection sensor (○)

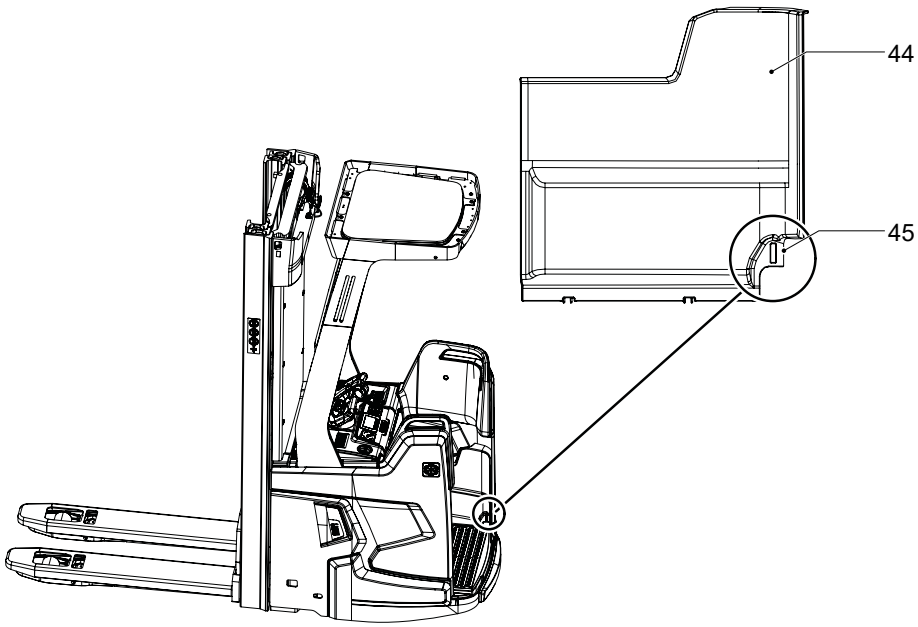

⚠ CAUTION!

The laser beam of the installed sensors can be hazardous

The sensors installed on the trucks correspond to laser protection class 1. Depending on the sensor, the wavelength is in the invisible range in terms of the human eye. Class 1 laser beams are not hazardous.

▶Do not look into the laser beam!

The foot protection sensor (45) monitors the open side of the stand-on platform. If an object (e.g. the operator's foot) is within the sensor's field of detection, and thus potentially protruding beyond the truck contour, the truck travel speed is reduced.

The sensor is integrated into the right-hand platform side panel (44).

Monitoring the electric steering

The electric steering system is self-monitoring. The steering controller checks the steering system continuously. If an error is detected, the traction controller interrupts travel mode (emergency stop) and brakes until the truck comes to a halt. The parking brake is then engaged.

Load backrest (○)

A load backrest is recommended as an additional safety device when moving low or small item loads above the protective screen panel. The load backrest is mounted on the load handler and protects the operator and truck against falling loads.

➔ The load backrest forms part of the protective and safety equipment. A fitted load backrest must not be removed. Trucks designed for use with a load backrest must not be operated without the load backrest in place.

➔ The extended mast height (h4) increases according to the load backrest mounted on the load handler, see page 49.

Mast cover

The protective screen panel or backrest protect the operator from moving mast parts and sliding loads – see page 23.

Overhead guard (○)

The truck can be equipped with an optional overhead guard to protect the operator from falling loads.

Two versions of the overhead guard are available: with protective screen panel and with protective struts, see page 23.

➔ The protective screen panel and struts are bolted in place and can be replaced, if necessary.

Floor-Spot (○)

The activated Floor-Spot forewarns people of the truck travel path by projecting a coloured light dot onto the floor at the set distance.

The Floor-Spot is available in two versions:

– With blue light dot
– With red light dot

➔ Further information: see page 63 and see page 178.

5 Technical Specifications

➔ Technical data specified in accordance with VDI 2198.
Technical modifications and additions reserved.

➔ In accordance with VDI 2198, the load centre is indicated by the letter "c" in this section. In the other sections and on the capacity plate, the letter "D" is used in accordance with EN ISO 3691-1.

➔ The technical data of the battery is summarised in the battery section – see page 83.

5.1 Performance data

5.1.1 ERC 214i-216i

ERC 214i		
Q	Rated capacity, mast lift (rated load)	1400 kg
	Drive system	Electric
	Operation	Tiller
	Service brake	Regenerative
	Travel speed FP3 in drive direction LH[1]< 400 mm with/without load Efficiency equipment variant	7.0 / 7.0 km/h
	Travel speed FP3 in fork direction LH[1] < 400 mm with/without load Efficiency equipment variant	7.0 / 7.0 km/h
	Travel speed FP3 in drive direction 400 mm < LH[1] < 2200 mm with/without load Efficiency equipment variant	3.5 / 3.5 km/h
	Travel speed FP3 in fork direction 400 mm < LH[1] < 2200 mm with/without load Efficiency equipment variant	3.5 / 3.5 km/h
	Travel speed FP3 in drive direction LH[1] > 2200 mm with/without load Efficiency equipment variant	2.5 / 2.5 km/h
	Travel speed FP3 in fork direction LH[1] > 2200 mm with/without load Efficiency equipment variant	2.5 / 2.5 km/h
	Travel speed FP3 in drive direction LH[1] < 400 mm with/without load drivePLUS equipment variant	9.2 / 12.0 km/h
	Travel speed FP3 in fork direction LH[1] < 400 mm with/without load drivePLUS equipment variant	9.0 / 9.0 km/h
	Travel speed FP3 in drive direction 400 mm < LH[1] < 2200 mm with/without load drivePLUS equipment variant	4.6 / 6.0 km/h
	Travel speed FP3 in fork direction 400 mm < LH[1] < 2200 mm with/without load drivePLUS equipment variant	4.5 / 4.5 km/h
	Travel speed FP3 in drive direction LH[1] > 2200 mm with/without load drivePLUS equipment variant	2.5 / 2.5 km/h
[1] LH = lift height (h3 + h13)		

ERC 214i		
	Travel speed FP3 in fork direction LH[1] > 2200 mm with/without load drivePLUS equipment variant	2.5 / 2.5 km/h
	Lift speed with/without load	0.19 / 0.35 m/s
	Lowering speed with/without load	0.43 / 0.49 m/s
	Drive motor, output S2 60 min	3.2 kW
	Lift motor, output in kW for S3	3.0 kW/11%
	Energieverbrauch nach EN 16796	0.86 kWh/h
1) LH = lift height (h3 + h13)		

ERC 216i		
Q	Rated capacity, mast lift (rated load)	1600 kg
	Drive system	Electric
	Operation	Tiller
	Service brake	Regenerative
	Travel speed FP3 in drive direction LH[1] < 400 mm with/without load Efficiency equipment variant	7.0 / 7.0 km/h
	Travel speed FP3 in fork direction LH[1] < 400 mm with/without load Efficiency equipment variant	7.0 / 7.0 km/h
	Travel speed FP3 in drive direction 400 mm < LH[1] < 2200 mm with/without load Efficiency equipment variant	3.5 / 3.5 km/h
	Travel speed FP3 in fork direction 400 mm < LH[1] < 2200 mm with/without load Efficiency equipment variant	3.5 / 3.5 km/h
	Travel speed FP3 in drive direction LH[1] > 2200 mm with/without load Efficiency equipment variant	2.5 / 2.5 km/h
	Travel speed FP3 in fork direction LH[1] > 2200 mm with/without load Efficiency equipment variant	2.5 / 2.5 km/h
	Travel speed FP3 in drive direction LH[1] < 400 mm with/without load drivePLUS equipment variant	9.2 / 12.0 km/h
	Travel speed FP3 in fork direction LH[1] < 400 mm with/without load drivePLUS equipment variant	9.0 / 9.0 km/h
1) LH = lift height (h3 + h13)		

ERC 216i		
	Travel speed FP3 in drive direction 400 mm < LH[1] < 2200 mm with/without load drivePLUS equipment variant	4.6 / 6.0 km/h
	Travel speed FP3 in fork direction 400 mm < LH[1] < 2200 mm with/without load drivePLUS equipment variant	4.5 / 4.5 km/h
	Travel speed FP3 in drive direction LH[1] > 2200 mm with/without load drivePLUS equipment variant	2.5 / 2.5 km/h
	Travel speed FP3 in fork direction LH[1] > 2200 mm with/without load drivePLUS equipment variant	2.5 / 2.5 km/h
	Lift speed with/without load	0.19 / 0.35 m/s
	Lowering speed with/without load	0.43 / 0.49 m/s
	Drive motor, output S2 60 min	3.2 kW
	Lift motor, output in kW for S3	3.0 kW/11%
	Energieverbrauch nach EN 16796	0.96 kWh/h
1) LH = lift height (h3 + h13)		

5.1.2 ERC 214zi-216zi

ERC 214zi			
Q	Rated capacity, mast lift (rated load)		1400 kg
Q	Rated capacity, initial lift		2000 kg
	Drive system		Electric
	Operation		Tiller
	Service brake		Regenerative
	Travel speed FP3 in drive direction LH[1] < 400 mm with/without load drivePLUS equipment variant		9.2 / 12.0 km/h
	Travel speed FP3 in fork direction LH[1] < 400 mm with/without load drivePLUS equipment variant		9.2 / 12.0 km/h
	Travel speed FP3 in drive direction 400 mm < LH[1] < 2200 mm with/without load drivePLUS equipment variant		4.6 / 6.0 km/h
	Travel speed FP3 in fork direction 400 mm < LH[1] < 2200 mm with/without load drivePLUS equipment variant		4.6 / 6.0 km/h
	Option maximum double-deck speed 400 mm < LH[1] < 1800 mm with/without load drivePLUS equipment variant		8.2 / 8.2 km/h
	Travel speed FP3 in drive direction LH[1] > 2200 mm with/without load drivePLUS equipment variant		2.5 / 2.5 km/h
	Travel speed FP3 in fork direction LH[1] > 2200 mm with/without load drivePLUS equipment variant		2.5 / 2.5 km/h
	Lift speed with/without load	DZ lift 1	0.2 / 0.33 m/s
		DZ lift 2	0.2 / 0.35 m/s
		ZT	0.22 / 0.40 m/s
	Lowering speed with/ without load	DZ, lift 1	0.34 / 0.20 m/s
		DZ, lift 2	0.42 / 0.49 m/s
		ZT	0.46 / 0.38 m/s
	Drive motor, output S2 60 min		3.2 kW
	Lift motor, output in kW for S3		3.0 kW/11%
	Energieverbrauch nach EN 16796		0.88 kWh/h
1) LH = lift height (h3 + h13)			

ERC 216zi			
Q	Rated capacity, mast lift (rated load)		1600 kg
Q	Rated capacity, initial lift		2000 kg
	Drive system		Electric
	Operation		Tiller
	Service brake		Regenerative
	Travel speed FP3 in drive direction LH[1] < 400 mm with/without load drivePLUS equipment variant		9.2 / 12.0 km/h
	Travel speed FP3 in fork direction LH[1] < 400 mm with/without load drivePLUS equipment variant		9.2 / 12.0 km/h
	Travel speed FP3 in drive direction 400 mm < LH[1] < 2200 mm with/without load drivePLUS equipment variant		4.6 / 6.0 km/h
	Travel speed FP3 in fork direction 400 mm < LH[1] < 2200 mm with/without load drivePLUS equipment variant		4.6 / 6.0 km/h
	Option maximum double-deck speed 400 mm < LH[1] < 1800 mm with/without load drivePLUS equipment variant		8.2 / 8.2 km/h
	Travel speed FP3 in drive direction LH[1] > 2200 mm with/without load drivePLUS equipment variant		2.5 / 2.5 km/h
	Travel speed FP3 in fork direction LH[1] > 2200 mm with/without load drivePLUS equipment variant		2.5 / 2.5 km/h
	Lift speed with / without load	DZ lift 1	0.19 / 0.33 m/s
		DZ lift 2	0.19 / 0.35 m/s
		ZT	0.21 / 0.40 m/s
	Lowering speed with / without load	DZ, lift 1	0.34 / 0.20 m/s
		DZ, lift 2	0.43 / 0.49 m/s
		ZT	0.45 / 0.38 m/s
	Drive motor, output S2 60 min		3.2 kW
	Lift motor, output in kW for S3		3.0 kW/11%
	Energieverbrauch nach EN 16796		0.98 kWh/h
1) LH = lift height (h3 + h13)			

5.1.3 ERC 214bi-216bi

ERC 214bi		
Q	Rated capacity, mast lift (rated load)	1400 kg
	Drive system	Electric
	Operation	Tiller
	Service brake	Regenerative
	Travel speed FP3 in drive direction LH[1] < 400 mm with/without load drivePLUS equipment variant	9.2 / 12.0 km/h
	Travel speed FP3 in fork direction LH[1] < 400 mm with/without load drivePLUS equipment variant	9.0 / 9.0 km/h
	Travel speed FP3 in drive direction 400 mm < LH[1] < 2200 mm with/without load drivePLUS equipment variant	4.6 / 6.0 km/h
	Travel speed FP3 in fork direction 400 mm < LH[1] < 2200 mm with/without load drivePLUS equipment variant	4.5 / 4.5 km/h
	Travel speed FP3 in drive direction LH[1] > 2200 mm with/without load drivePLUS equipment variant	2.5 / 2.5 km/h
	Travel speed FP3 in fork direction LH[1] > 2200 mm with/without load drivePLUS equipment variant	2.5 / 2.5 km/h
	Lift speed with/without load	0.19 / 0.35 m/s
	Lowering speed with/without load	0.43 / 0.49 m/s
	Drive motor, output S2 60 min	3.2 kW
	Lift motor, output in kW for S3	3.0 kW/11%
	Energieverbrauch nach EN 16796	0.86 kWh/h
1) LH = lift height (h3 + h13)		

ERC 216bi		
Q	Rated capacity, mast lift (rated load)	1600 kg
	Drive system	Electric
	Operation	Tiller
	Service brake	Regenerative
	Travel speed FP3 in drive direction LH[1] < 400 mm with/without load drivePLUS equipment variant	9.2 / 12.0 km/h
1) LH = lift height (h3 + h13)		

ERC 216bi		
	Travel speed FP3 in fork direction LH[1] < 400 mm with/without load drivePLUS equipment variant	9.0 / 9.0 km/h
	Travel speed FP3 in drive direction 400 mm < LH[1] < 2200 mm with/without load drivePLUS equipment variant	4.6 / 6.0 km/h
	Travel speed FP3 in fork direction 400 mm < LH[1] < 2200 mm with/without load drivePLUS equipment variant	4.5 / 4.5 km/h
	Travel speed FP3 in drive direction LH[1] > 2200 mm with/without load drivePLUS equipment variant	2.5 / 2.5 km/h
	Travel speed FP3 in fork direction LH[1] > 2200 mm with/without load drivePLUS equipment variant	2.5 / 2.5 km/h
	Lift speed with/without load	0.19 / 0.35 m/s
	Lowering speed with/without load	0.43 / 0.49 m/s
	Drive motor, output S2 60 min	3.2 kW
	Lift motor, output in kW for S3	3.0 kW/11%
	Energieverbrauch nach EN 16796	0.96 kWh/h
1) LH = lift height (h3 + h13)		

5.2 Travel Programs

This section lists the standard features of the different travel programs. The procedure for activating a travel program is outlined in the “Operation” section see page 105.

5.2.1 ERC 214i-216i

Travel program 1

Setting	Equipment version	Default value
Acceleration	Standard	0.42 m/s²
	drivePLUS	0.60 m/s²
Maximum speed in drive direction	Standard	7 km/h
	drivePLUS	8 km/h
Maximum speed in load direction	Standard	7 km/h
	drivePLUS	7 km/h
Coasting brake	Standard	1.30 m/s²
	drivePLUS	1.30 m/s²

Travel program 2

Setting	Equipment version	Default value
Acceleration	Standard	0.7 m/s²
	drivePLUS	1.00 m/s²
Maximum speed in drive direction	Standard	7 km/h
	drivePLUS	10 km/h
Maximum speed in load direction	Standard	7 km/h
	drivePLUS	8 km/h
Coasting brake	Standard	1.30 m/s²
	drivePLUS	1.30 m/s²

Travel program 3

Setting	Equipment version	Default value
Acceleration	Standard	1.0 m/s²
	drivePLUS	1.20 m/s²
Maximum speed in drive direction	Standard	7 km/h
	drivePLUS	12 km/h
Maximum speed in load direction	Standard	7 km/h
	drivePLUS	9 km/h
Coasting brake	Standard	1.30 m/s²
	drivePLUS	1.30 m/s²

5.2.2 ERC 214zi-216zi

Travel program 1

Setting	Equipment version	Default value
Acceleration	drivePLUS	0.6 m/s²
Maximum speed in drive direction	drivePLUS	9 km/h
Maximum speed in load direction	drivePLUS	9 km/h
Coasting brake	drivePLUS	1.3 m/s²

Travel program 2

Setting	Equipment version	Default value
Acceleration	drivePLUS	1 m/s²
Maximum speed in drive direction	drivePLUS	12 km/h
Maximum speed in load direction	drivePLUS	9 km/h
Coasting brake	drivePLUS	1.3 m/s²

Travel program 3

Setting	Equipment version	Default value
Acceleration	drivePLUS	1.2 m/s²
Maximum speed in drive direction	drivePLUS	12 km/h
Maximum speed in load direction	drivePLUS	12 km/h
Coasting brake	drivePLUS	1.0 m/s²

5.2.3 ERC 214bi-216bi

Travel program 1

Setting	Equipment version	Default value
Acceleration	drivePLUS	0.6 m/s²
Maximum speed in drive direction	drivePLUS	8 km/h
Maximum speed in load direction	drivePLUS	7 km/h
Coasting brake	drivePLUS	1.3 m/s²

Travel program 2

Setting	Equipment version	Default value
Acceleration	drivePLUS	1 m/s²
Maximum speed in drive direction	drivePLUS	10 km/h
Maximum speed in load direction	drivePLUS	8 km/h
Coasting brake	drivePLUS	1.3 m/s²

Travel program 3

Setting	Equipment version	Default value
Acceleration	drivePLUS	1.2 m/s²
Maximum speed in drive direction	drivePLUS	12 km/h
Maximum speed in load direction	drivePLUS	9 km/h
Coasting brake	drivePLUS	1.0 m/s²

5.3 Gradeability

Designation	ERC 214i 214bi	ERC 216i 216bi
Gradeability on empty run	16 %	16 %
Max. gradeability for transport travel in mast lift (rated load Q)	8 %	8 %

	ERC 214zi	ERC 216zi
Gradeability on empty run	16 %	16 %
Max. gradeability for transport travel in mast lift (rated load Q)	8 %	8 %
Max. gradeability for transport travel in support arm lift (load 2.0 t)	8 %	8 %

5.4 Dimensions

5.4.1 ERC 214i-216i

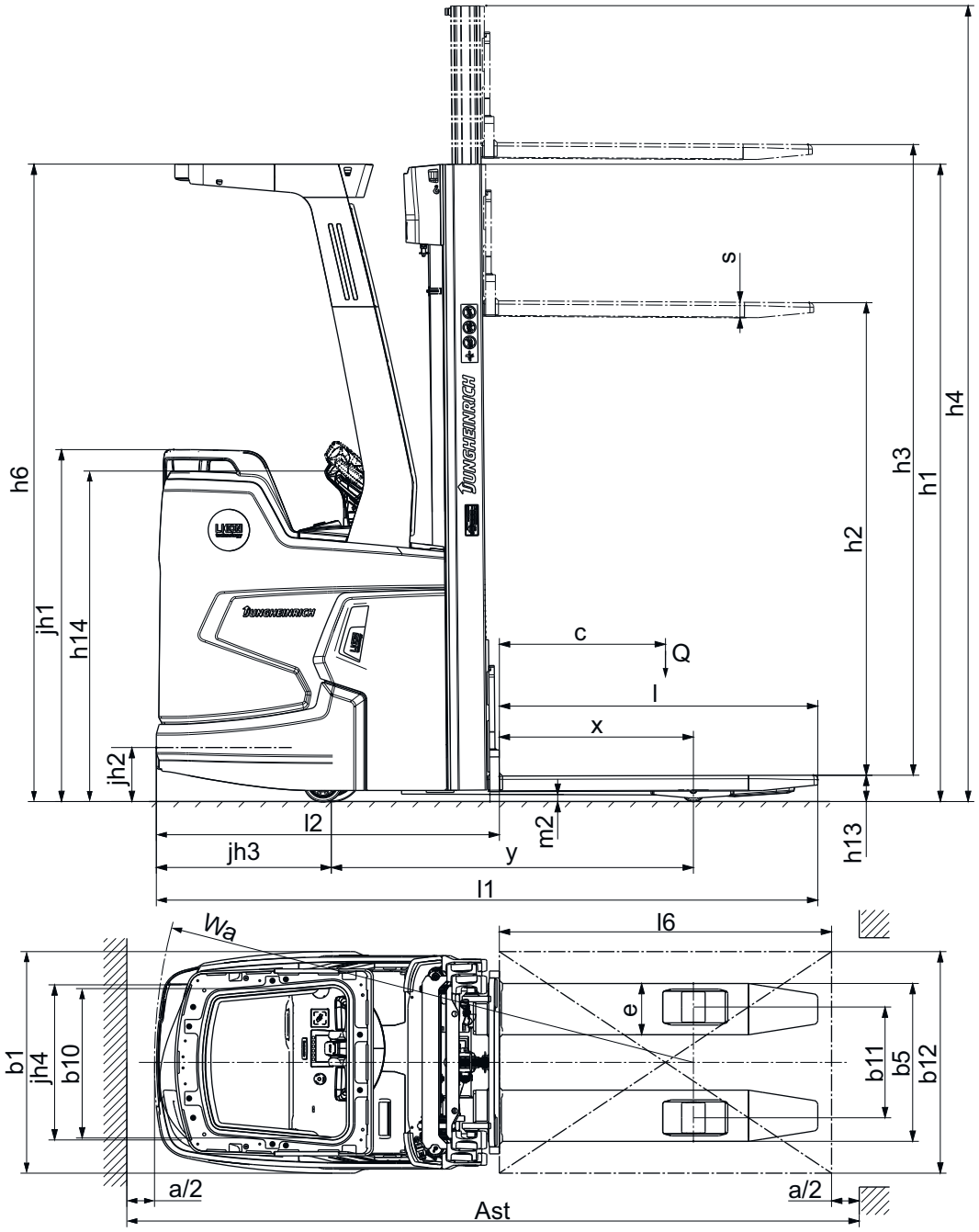

l_1	Overall length	2389 mm
l_2	Headlength	1239 mm
l_6	See footnotes	
m_2	Ground clearance, centre of wheelbase	26 mm
h_1	Mast height retracted	2300 mm
h_2	Free lift	1718 mm
h_3	Lift	5250 mm
h_4	Mast height extended	5832 mm
h_6	Overhead guard height	2300 mm
h_{13}	Lowered fork arm height	90 mm
h_{14}	Tiller height in min./max. travel position	1185 / 1245 mm
y	Wheelbase	1308 mm
x	Load distance	701 mm
b_1/b_2	Overall width	800 mm
b_5	Width across forks	570 mm
b_{10}	Track width, front	535 mm
b_{11}	Track width, rear	400 mm
b_{12}	See footnotes	
s	Fork-arm dimensions	56 mm
e		185 mm
l		1150 mm
Wa	Turning radius	1947 mm
Ast	Aisle width with pallet transverse 1000 x 1200 mm [1]	2821 mm [2]
Ast	Aisle width with pallet lengthways 800 x 1200 mm [3]	2792 mm [4]
c	Load centre distance	600 mm
jh1	-	1271 mm
jh2	-	195 mm
jh3	-	631 mm
jh4	-	560 mm

[1] l_6=1150 mm, b_{12}=1200 mm (forks protruding)

[2] Reduced aisle width for load pickup/setting down on the ground with free swivel range: 2596 mm

[3] l_6=1200 mm, b_{12}=800 mm

[4] Reduced aisle width for load pickup/setting down on the ground with free swivel range: 2646 mm

5.4.2 ERC 214zi-216zi

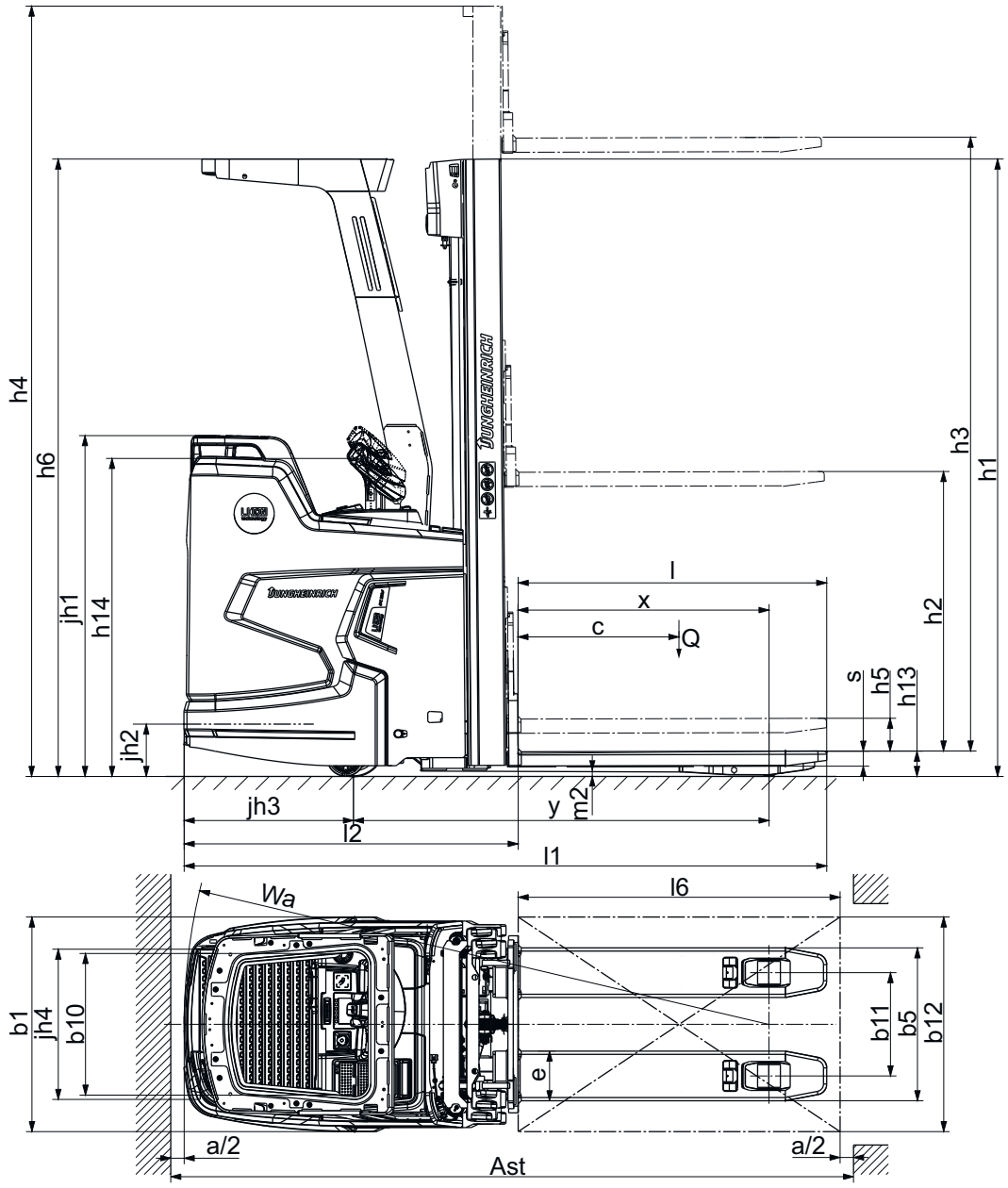

l_1	Overall length	2395 mm
l_2	Headlength	1245 mm
l_6	See footnotes	
m_2	Ground clearance, centre of wheelbase	18 mm
h_1	Mast height retracted	2300 mm
h_2	Free lift	1718 mm
h_3	Lift	5250 mm
h_4	Mast height extended	5832 mm
h_5	Initial lift	122 mm
h_6	Overhead guard height	2300 mm
h_{13}	Lowered fork arm height	90 mm
h_{14}	Tiller height in min./max. travel position	1185 / 1245 mm
y	Wheelbase	1498 mm [1]
x	Load distance	883 mm [2]
b_1/b_2	Overall width	800 mm
b_5	Width across forks	570 mm
b_{10}	Track width, front	535 mm
b_{11}	Track width, rear	385 mm
b_{12}	See footnotes	
s	Fork-arm dimensions	56 mm
e		185 mm
l		1150 mm
Wa	Turning radius	2129 mm [1]
Ast	Aisle width with pallet transverse 1000 x 1200 mm [3]	2940 mm [4]
Ast	Aisle width with pallet lengthways 800 x 1200 mm [5]	2839 mm [6]
c	Load centre distance	600 mm
jh1	-	1271 mm
jh2	-	195 mm
jh3	-	631 mm
jh4	-	560 mm

1) With lowered load handler: specification + 51 mm

2) With lowered load handler: specification + 53 mm

3) l_6=1150 mm, b_{12}=1200 mm (forks protruding)

4) Reduced aisle width for load pickup/setting down on the ground with free swivel range: 2595 mm

5) l_6=1200 mm, b_{12}=800 mm

6) Reduced aisle width for load pickup/setting down on the ground with free swivel range: 2645 mm

5.4.3 ERC 214bi-216bi

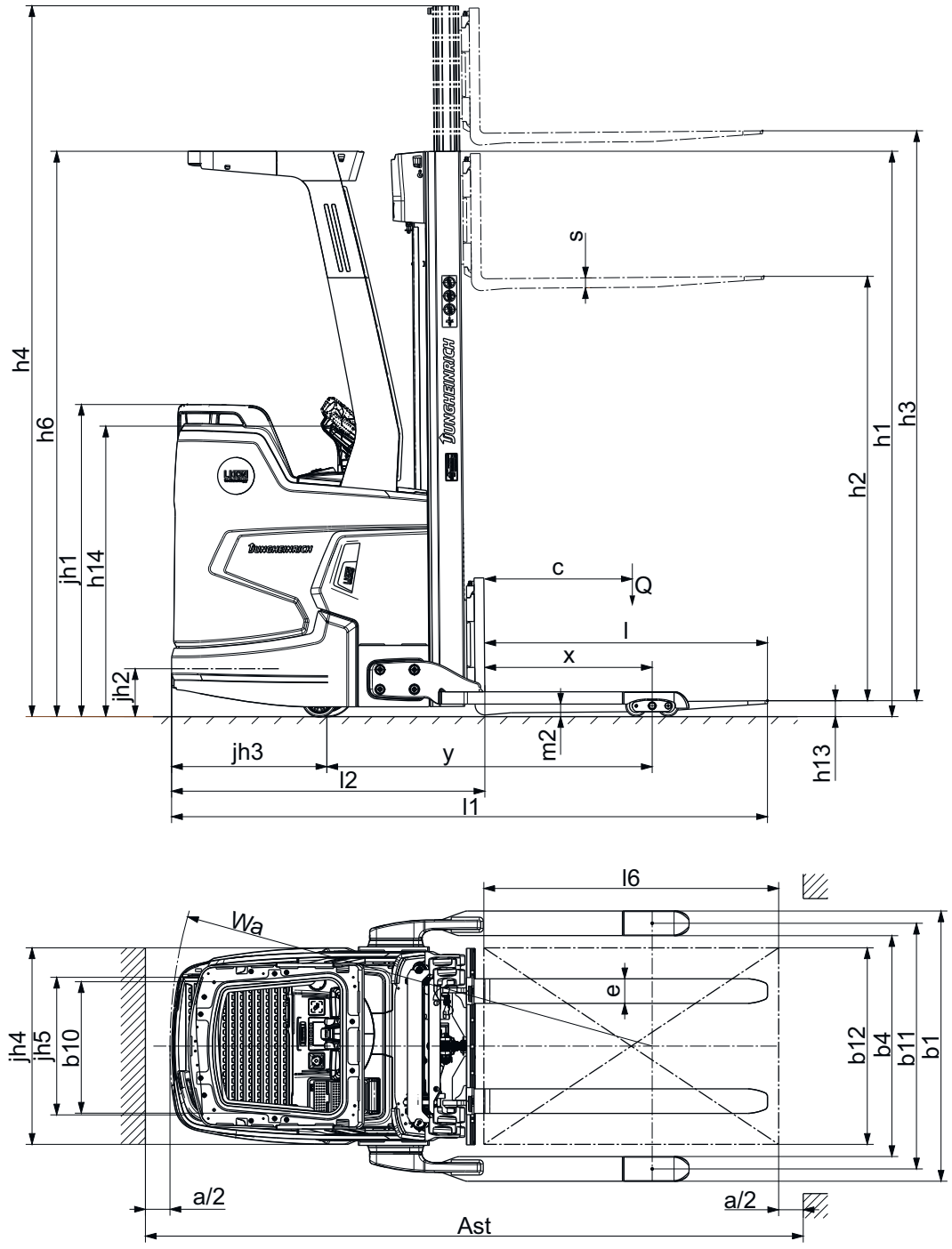

l_1	Overall length	2425 mm
l_2	Headlength	1274 mm
l_6	See footnotes	
m_2	Ground clearance, centre of wheelbase	50 mm
h_1	Mast height retracted	2300 mm [1]
h_2	Free lift	1718 mm [1]
h_3	Lift	5250 mm [1]
h_4	Mast height extended	5832 mm [1]
h_6	Overhead guard height	2300 mm
h_{14}	Tiller height in min./max. travel position	1185/1245 mm
y	Wheelbase	1324 mm
x	Load distance	681 mm
b_1/b_2	Overall width (incremental)	1100 / 1270 / 1470 mm
b_{10}	Track width, front	535 mm
b_{11}	Rear track width (incremental)	1000 / 1170 / 1370 mm
b_{12}	See footnotes	
s	Fork-arm dimensions	40 mm
e		100 mm
l		1150 mm
Wa	Turning radius	1963 mm
Ast	Aisle width with pallet transverse 1000 x 1200 mm [2]	2843 / 2843 / 2905 mm [3]
Ast	Aisle width with pallet lengthways 800 x 1200 mm [4]	2781 / 2781 / 2868 mm [5]
c	Load centre distance	600 mm
jh1	-	1271 mm
jh2	-	195 mm
jh3	-	631 mm
jh4	-	800 mm
jh5	-	560 mm

1) Specifications for truck with standard mast 5250 DZ / battery 260 Ah / overhead guard

2) l_6=1150 mm, b_{12}=1200 mm (forks protruding)

3) Reduced aisle width for load pickup/setting down on the ground with free swivel range: 2632 mm

4) l_6=1200 mm, b_{12}=800 mm

5) Reduced aisle width for load pickup/setting down on the ground with free swivel range: 2645 mm

5.5 Weights

Specifications for truck with standard mast 5250 DZ / battery 260 Ah / overhead guard.

5.5.1 ERC 214i-216i

	ERC 214i	ERC 216i
Net weight (incl. battery)	1470 kg	1480 kg
Axle load, with load (front/rear)	1195 / 1675 kg	1210 / 1870 kg
Axle load, without load (front/rear)	1085 / 385 kg	1090 / 390 kg

5.5.2 ERC 214zi-216zi

	ERC 214zi	ERC 216zi
Net weight (incl. battery)	1560 kg	1570 kg
Axle load, with load (front/rear)	1455 / 1505 kg	1480 / 1690 kg
Axle load, without load (front/rear)	1225 / 335 kg	1230 / 340 kg

5.5.3 ERC 214bi-216bi

	ERC 214bi	ERC 216bi
Net weight (incl. battery)	1500 kg	1510 kg
Axle load, with load (front/rear)	1215 / 1685 kg	1230 / 1880 kg
Axle load, without load (front/rear)	1145 / 355 kg	1150 / 360 kg

5.6 Rated Capacity of Stand-on Platform

Rated capacity of stand-on platform	150 kg

5.7 Wheels

5.7.1 ERC 214i-216i

	Tyres Tyre size, front		PU
			ø 230 x 77 mm
	Tyre size, rear	Single	ø 85 x 75 mm
	Tyre size, rear	Tandem	ø 85 x 75 mm
	Additional wheels (dimensions)		ø 140 x 57 mm
	Wheels, number front / rear		1 x + 1 / 2
b_{10}	Track width, front		535 mm
b_{11}	Track width, rear		400 mm

5.7.2 ERC 214zi-216zi

	Tyres		PU
	Tyre size, front		ø 230 x 77 mm
	Tyre size, rear	Single	ø 85 x 75 mm
	Tyre size, rear	Tandem	ø 85 x 75 mm
	Additional wheels (dimensions)		ø 140 x 57 mm
	Wheels, number front / rear		1 x + 1 / 2
b_{10}	Track width, front		535 mm
b_{11}	Track width, rear		385 mm

5.7.3 ERC 214bi-216bi

	Tyres	PU
	Tyre size, front	ø 230 x 77 mm
	Tyre size, rear	ø 85 x 75 mm
	Additional wheels (dimensions)	ø 140 x 54 mm
	Wheels, number front / rear	1 x + 1 / 4
b_{10}	Track width, front	535 mm
b_{11}	Track width, rear	1000 / 1170 / 1370 mm

5.8 EN norms

⚠ WARNING!

Damage to medical equipment due to non-ionising radiation

Electrical equipment on the truck emitting non-ionising radiation (e.g. wireless data transmission) can affect operators' medical equipment (pacemakers, hearing aids etc.) and result in malfunctions.

▶ Consult a doctor or the manufacturer of the medical equipment to clarify whether the medical equipment can be used near the industrial truck.

Continuous sound pressure level

– ERC 214-216i /zi /bi: 68 dB (A)

in accordance with EN 12053 as harmonised with ISO 4871.

➔ The continuous sound pressure level is calculated according to standard procedures and takes into account the sound pressure level when driving, lifting and idling. The noise level is measured at the driver's ear.

➔ Noise levels can fluctuate according to ground conditions and wheel lining.

Vibration

Information below according to EN 13059:
– Stand-on platform, fixed suspension: 0,74 m/s²
– Stand-on platform with adjustable suspension: 0,46 (bei Einstellung 0, see page 121)

➔ The vibration acceleration acting on the body in its operating position is the linearly integrated, weighted acceleration in the vertical axis according to the standard. It is calculated when travelling over thresholds at constant speed. These recordings were taken on a single occasion and must not be confused with the human vibrations of the "2002/44/EC/Vibrations" operator directive. The manufacturer offers a special service to measure these human vibrations, see page 231.

➔ The internal accuracy of the measuring chain at 21 °C is ± 0,02 m/s². Further deviations may occur, in particular due to the positioning of the sensor and different driver weights.

Electromagnetic compatibility (EMC)

The manufacturer confirms that the truck adheres to the limits for electromagnetic emissions and resistance as well as the static electricity discharge test in accordance with EN 12895 as well as the standardised instructions contained therein.

➔ No changes to electric or electronic components or their arrangement may be made without the written agreement of the manufacturer.

5.9 Specifications according to RED guideline (Radio Equipment Directive) for radio units

➔ The table contains any components installed according to the European Directive 2014/53/EU. The table shows the affected frequency range and the emitted transmission power for each component.

Component	Frequency range	Transmission power
WMT 110	2.4 GHz (Bluetooth)	≤ 10 mW
WMT 110	2.4 GHz (WLAN)	≤ 100 mW
WMT 110	5 GHz (WLAN)	≤ 100 mW
WMT 115	2.4 GHz (Bluetooth)	≤ 10 mW
WMT 115	2.4 GHz (WLAN)	≤ 100 mW
WMT 115	5 GHz (WLAN)	≤ 100 mW
Transponder reader	13.56 MHz	< 100 mW
Transponder reader (Plus)	125 kHz	≤ 500 mW
Transponder reader (Plus)	13.56 MHz	≤ 500 mW
Telematics box basic 2G EU	2.4 GHz (Bluetooth)	< 20 mW
	900 MHz (2G)	< 2 W
	1800 MHz (2G)	< 1 W
Telematics box basic 3G/2G INT	2.4 GHz (Bluetooth)	< 20 mW
	850/900 MHz (2G)	< 2 W
	1800/1900 MHz (2G)	< 1 W
	800/850/900/1900/2100 MHz (3G)	< 250 mW
Telematics box basic 4G/2G EU	2.4 GHz (Bluetooth)	< 20 mW
	850/900 MHz (2G)	< 2 W
	1800/1900 MHz (2G)	< 1 W
	800/900/1800/2100 MHz (4G)	< 200 mW
Telematics box basic 4G/3G US	2.4 GHz (Bluetooth)	< 20 mW
	800/850/900/1900/2100 MHz (3G)	< 250 mW
	700/850/1700/1900 MHz (4G)	< 200 mW
Telematics box basic 4G/3G AUS	2.4 GHz (Bluetooth)	< 20 mW
	800/850/900/1900/2100 MHz (3G)	< 250 mW
	700/850/900/1800 MHz (4G)	< 200 mW

Component	Frequency range	Transmission power
Telematics box Plus 3G/2G INT	2.4 GHz (WLAN)	< 100 mW
	5 GHz (WLAN)	< 100 mW
	2.4 GHz (Bluetooth)	< 10 mW
	850/900 MHz (2G)	< 2 W
	1800/1900 MHz (2G)	< 1 W
	800/850/900/1900/2100 MHz (3G)	< 250 mW
Telematics box Plus 4G/2G EU	2.4 GHz (Bluetooth)	< 10 mW
	2.4 GHz (WLAN)	< 100 mW
	5 GHz (WLAN)	< 100 mW
	850/900 MHz (2G)	< 2 W
	1800/1900 MHz (2G)	< 1 W
	800/900/1800/2100 MHz (4G)	< 200 mW
Telematics box Plus 4G/3G US	2.4 GHz (Bluetooth)	< 10 mW
	2.4 GHz (WLAN)	< 100 mW
	5 GHz (WLAN)	< 100 mW
	800/850/900/1900/2100 MHz (3G)	< 250 mW
	700/850/1700/1900 MHz (4G)	< 200 mW
Telematics box Plus 4G/3G AUS	2.4 GHz (Bluetooth)	< 10 mW
	2.4 GHz (WLAN)	< 100 mW
	5 GHz (WLAN)	< 100 mW
	800/850/900/1900/2100 MHz (3G)	< 250 mW
	700/850/900/1800 MHz (4G)	< 200 mW
zoneCONTROL (PULSE)	3649.6 MHz - 4337.6 MHz	0.037 mW
zoneCONTROL (PHASE)	2480 MHz ISM band	100 mW, adjustable

5.10 Electrical Requirements

The manufacturer certifies compliance with the requirements for the design and manufacture of electrical equipment, according to EN 1175 "Industrial Truck Safety - Electrical Requirements", provided the truck is used according to its purpose.

5.11 Power supply of on-board charger (○)

Component	Mains voltage	Mains frequency
ELH on-board charger (○)	230 V (+15 %, -10 %)	50 Hz - 60 Hz (+15 %, -10 %)

5.12 Safety of trucks

The manufacturer confirms adherence to the requirement for design and manufacture of the truck with regard to the safety requirements specific to intended use in accordance with EN ISO 3691-1.

5.13 USB charging module

Component	Output current	Output voltage
USB charging module (2-way)	2,4 A	5 V

6 Identification Points and Data Plates

Warnings and notices such as capacity plates, attachment points and data plates must be legible at all times. Replace if necessary.

6.1 Indication Points

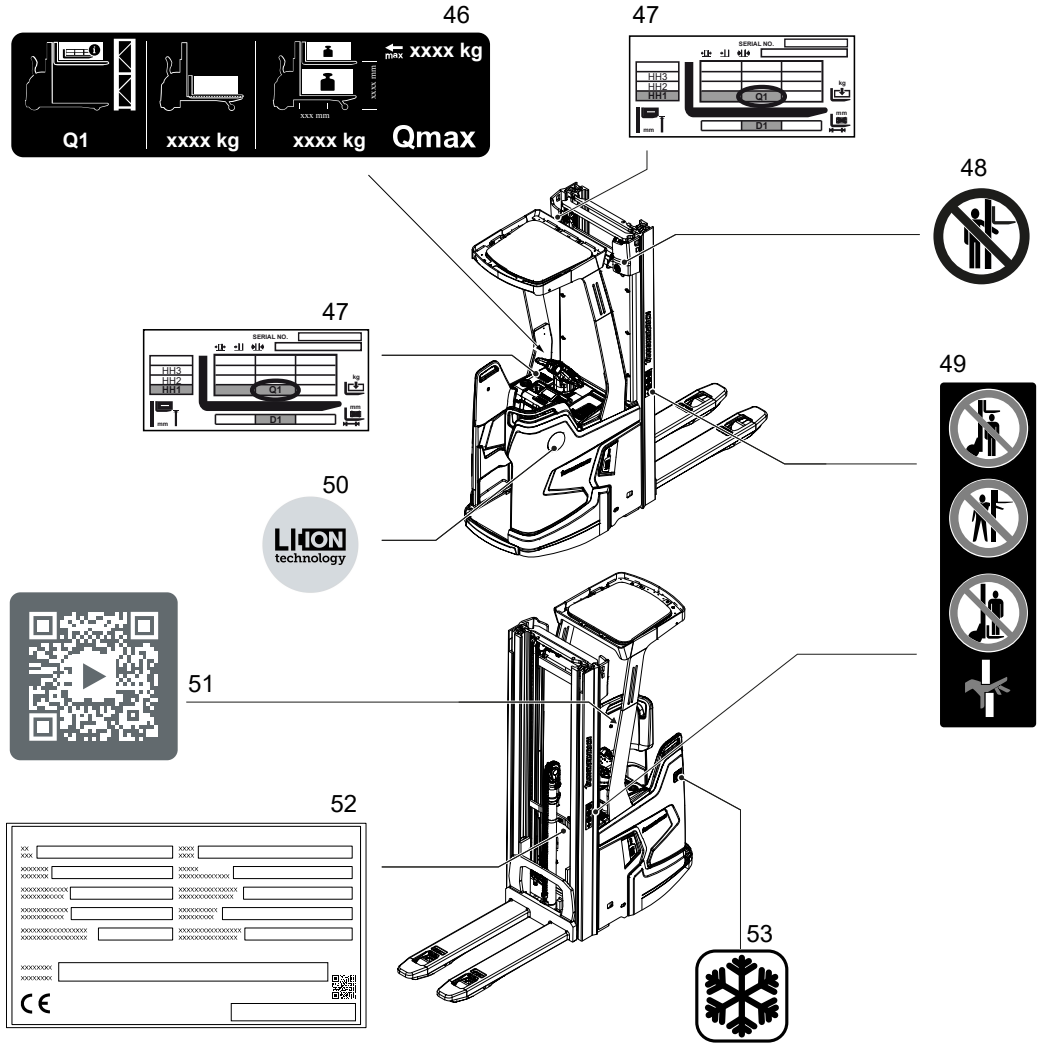

Item		Description
-	●	Lithium-ion battery data plate, attached to the battery (not visible in the drawing)
46	○	– ERC 214i-216i/ERC 214bi-216bi: No plate – ERC 214zi-216zi: Capacity plate for stacking and transport operations – ERC 214zi-216zi with double-deck function: Capacity plate for stacking, transport and double-deck operations
47	●	Truck capacity plate (varies depending on the truck equipment – see page 66)
48	●	Prohibition plate: "Do not reach through the mast"

Item		Description
49	●	Combined plate: - Prohibition plate: "Do not step under the load handler" - Prohibition plate: "Do not reach through the mast" - Prohibition plate: "Lifting persons prohibited" - Risk of trapping
50	●	"Lithium-ion battery" plate
51	●	Information sign: "QR code" ➔ The QR code contains a short online video on the basic functions of the industrial truck.
52	●	Data plate
53	○	"Cold-store equipment" plate

6.1.1 Marking Points for Trucks with Blue Floor-Spot (○)

Marking points on the truck

➔ Trucks with blue Floor-Spot are equipped with additional warning notices.

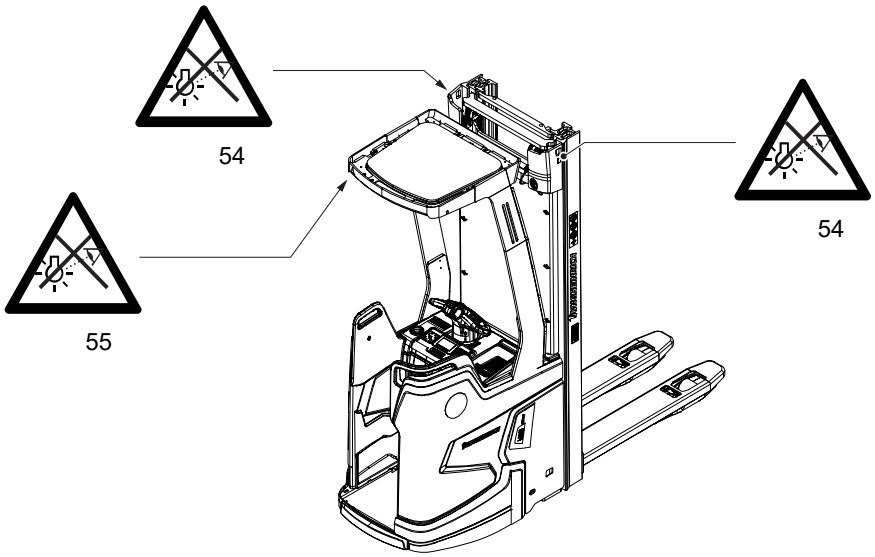

Item		Description
54	○	Warning notice: "Danger! Optical radiation" on trucks with blue Floor-Spot on the mast
55	○	Warning notice: "Danger! Optical radiation" on trucks with blue Floor-Spot on the overhead guard

Marking points of blue Floor-Spot (○)

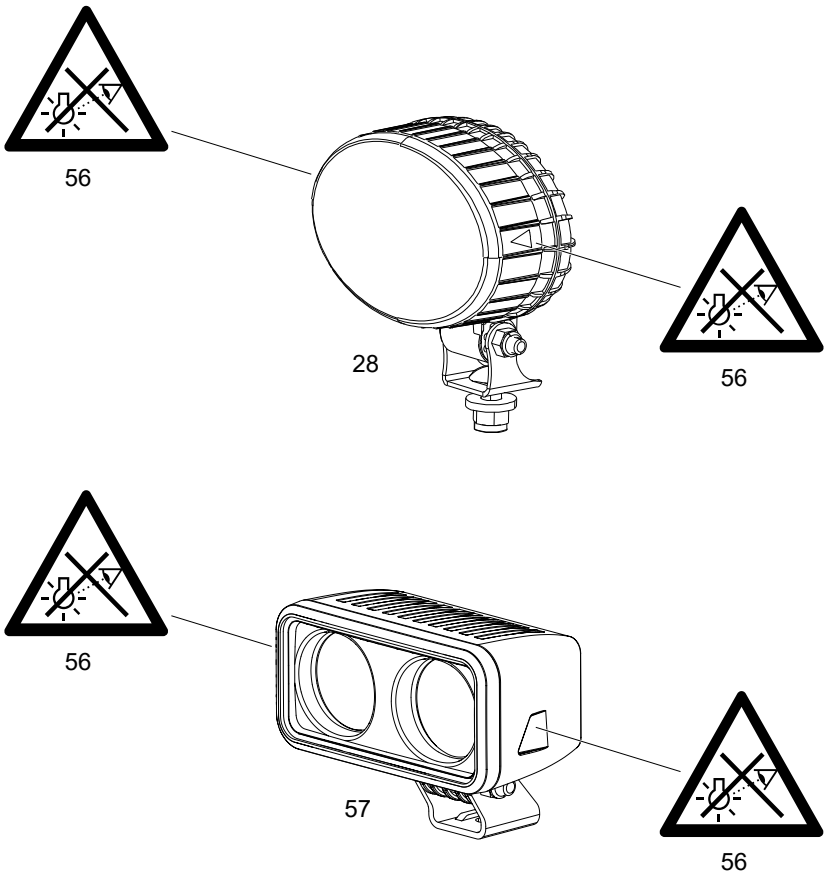

A blue Floor-Spot has an additional warning notice on the left and right on the housing.

➔ From 2022, there is an overhauled version of the Floor-Spot.

Item		Description
28	○	Floor-Spot version until 2022
56	○	Warning notice: "Danger! Optical radiation" (on trucks with blue Floor-Spot)
57	○	Revised Floor-Spot version from 2022

6.2 Data plate

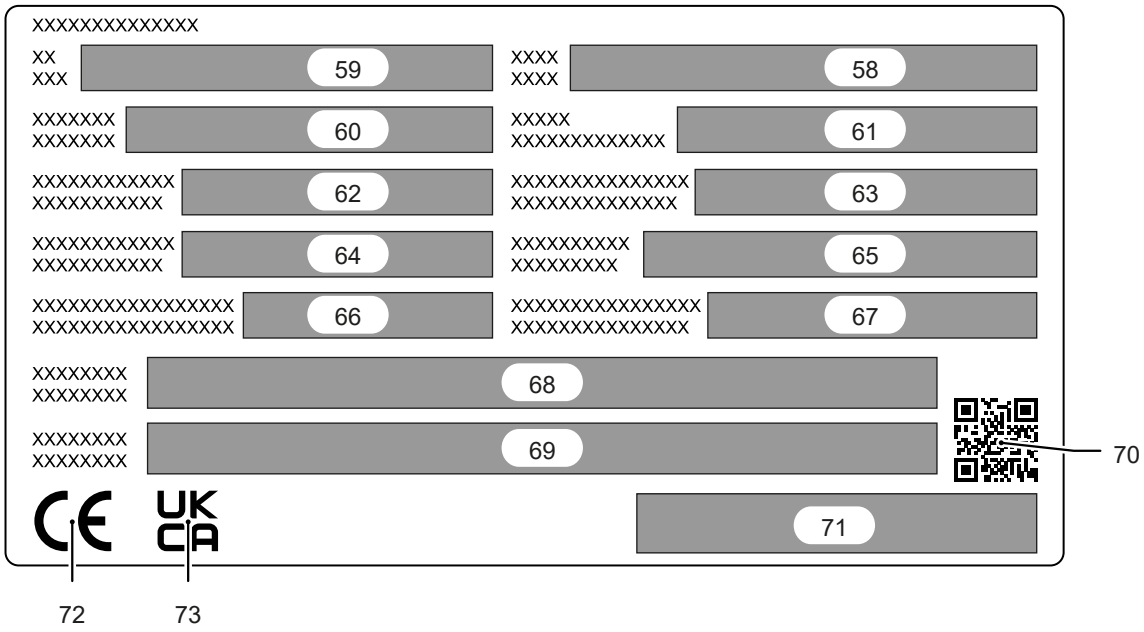

Item	Description	Item	Description
58	Year of manufacture	66	Net weight without battery [kg]
59	Type	67	Min./max. battery weight [kg]
60	Serial number	68	Manufacturer
61	Option	69	Importer - imported by (○)
62	Rated capacity [kg]	70	QR code
63	Load centre distance [mm]	71	Manufacturer's logo
64	Battery voltage [V]	72	CE marking[1)]
65	Drive output [kW]	73	UKCA marking (○)[2)]

➔ For queries regarding the truck or when ordering spare parts, always quote the truck serial number (60).

➔ The illustration shows the standard version for EU member states. The data plate may differ in other countries.

➔ The battery data plate is described in the relevant section – see page 85.

1) *Conformité Européenne*

2) *United Kingdom Conformity Assessed*

6.3 Truck capacity plate

6.3.1 Type A

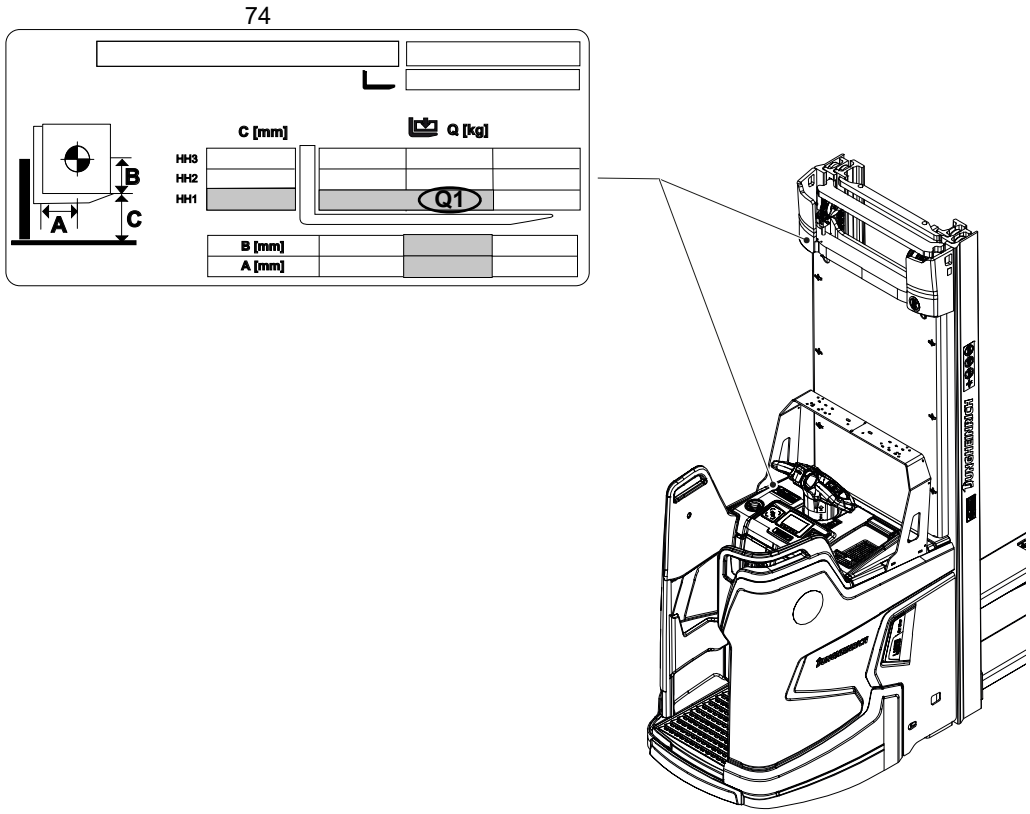

The capacity plate (74) indicates the maximum capacity Q (in kg) for a given load centre distance A (in mm) and corresponding lift height C (in mm) for the truck when picking up a load.

Example of how to calculate the maximum capacity: With a vertical load centre B, a horizontal load centre A and a lift height up to HH1, the maximum capacity is Q1.

6.3.2 Type B

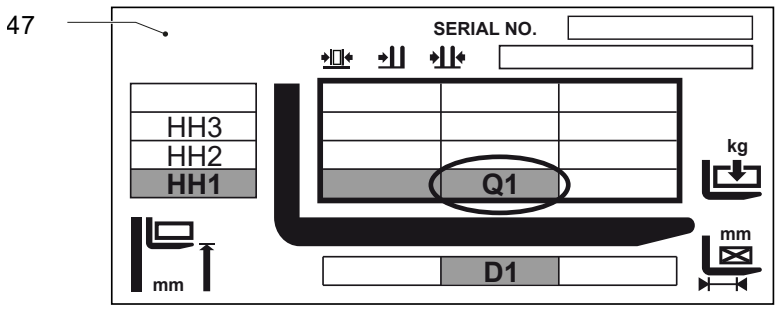

The capacity plate (47) indicates the maximum capacity Q (in kg) for a given load centre distance D (in mm) and corresponding lift height H (in mm) for the truck when raising a load.

Example of how to calculate the maximum capacity: The maximum capacity is Q1 at a load centre G within the load centre distance D1 and a lift height up to HH1.

Load centre distance

Side view from the right

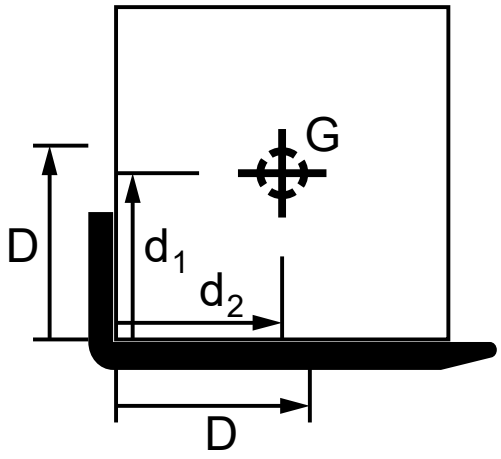

View from above

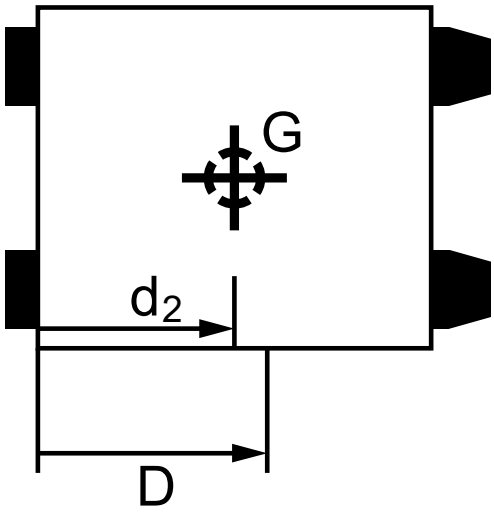

The load centre distance D of the load handler is specified as the horizontal distance from the front face and the vertical distance from the upper edge of the load handler.

The capacity plate for standard load handlers specifies valid load centre distances of 500 mm, 600 mm and 700 mm.

The distances d_1 and d_2 depicted in the illustration between the load handler and the actual centre of gravity G of the load must be smaller or equal to the load centre distance D ($d_1 \leq D$ and $d_2 \leq D$) to avoid the risk of overturning, see page 152.

6.3.3 Example of Use of Capacity Plate

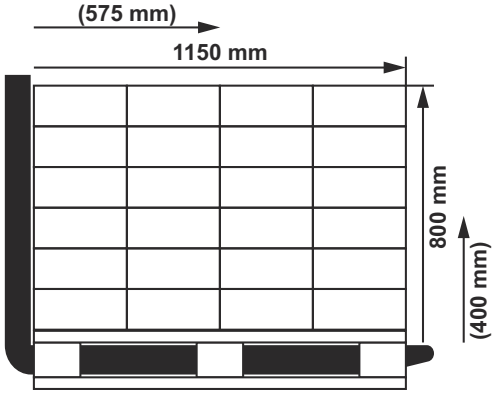

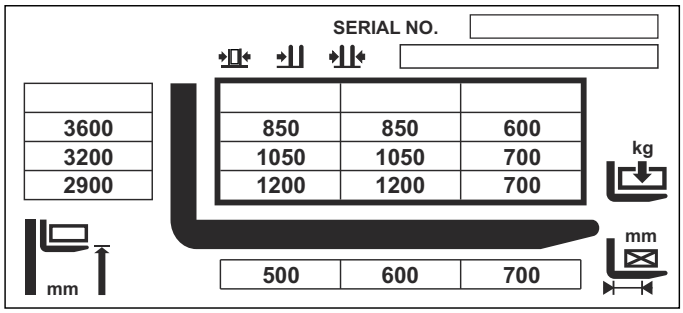

Example load (palletised):
- several cardboard boxes of the same size and same weight
- Load height: 800 mm
- Load length: 1150 mm
- Distances between the load centre distance and the load handler:
  400 mm vertical, 575 mm horizontal

For loads with an even weight distribution, the load centre distance lies in the geometric centre of the volume.

For rectangular loads with an even weight distribution over the entire volume the load centre distance is in the middle, i.e. half the length, half the height and half the width of the load.

Load centre distance of the load handler:
- The capacity plate specifies valid load centre distances for the load handler of 500 mm, 600 mm and 700 mm.
- The second load centre distance suits the example load: At 600 mm it is greater than the distances of 400 mm and 575 mm between the load centre of gravity and the load handler .

Capacities as specified in the capacity plate depending on the lift heights at a load centre distance of 600 mm:
- At a lift height of 2900 mm the maximum capacity is 1200 kg.
- At a lift height of 3200 mm the maximum capacity is 1050 kg.
- At a lift height of 3600 mm the maximum capacity is 850 kg.

6.3.4 Lift height markings

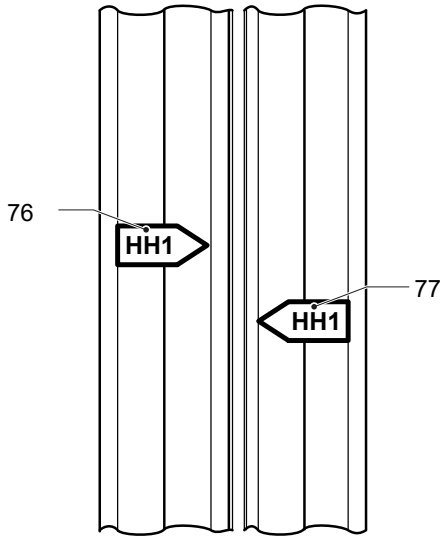

The arrow markings on the outer mast (76) and the inner mast (77) show the operator when the lift height limits prescribed by the capacity plate are reached.

6.4 Capacity plate for stacking and transport operation

➔ Only ERC 214zi-216zi

➔ Not for ERC 214zi-216zi with double-deck function (○)

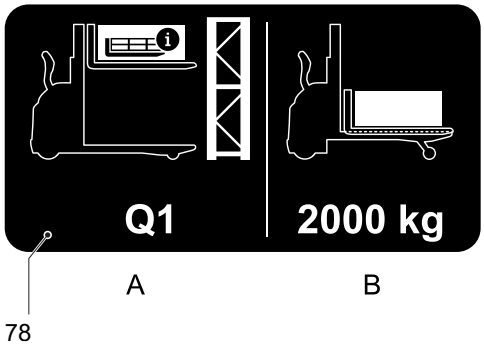

A	Stacking operations (stacking and retrieving loads): In the mast lift, the rated capacity must be considered according to the lift height, see page 66.
B	Transport operations: Capacity for horizontal transport max. 2000 kg with raised support arms without mast lift.

The stacking and transport operation capacity plate indicates the capacity Q (in kg) of the truck during stacking and transport operation.

6.5 Capacity plate for stacking, transport and double-deck operation

⚠ CAUTION!

Risk to operational stability

In order not to jeopardize the operational stability, pay attention to the weight when transporting two pallets so that the truck does not tip over.

▶ In order not to jeopardize the operational stability, the heavier pallet should always be transported underneath.

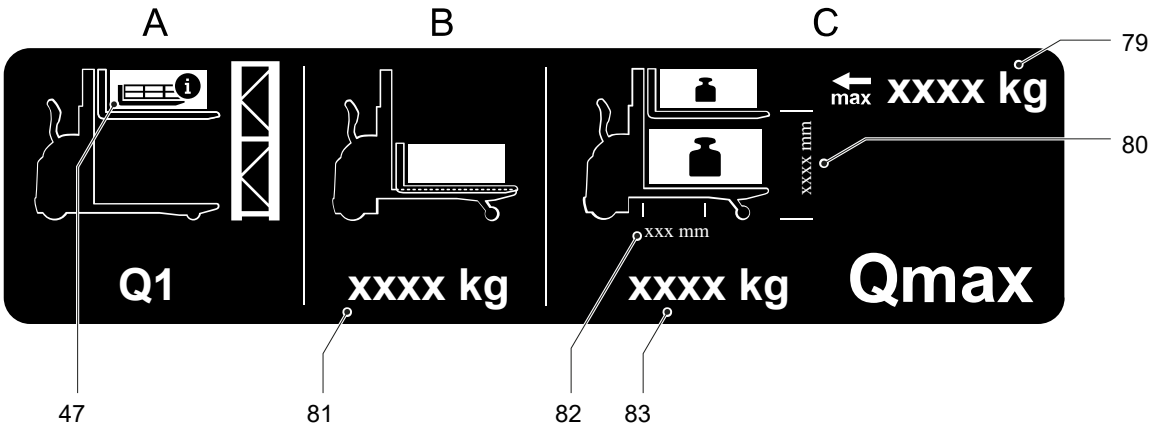

The capacity plate for stacking, transport and double-deck operations specifies the truck capacity during stacking, transport and double-deck operations.

A	Stacking operations (stacking and retrieving loads) in mast lift – The capacity according to the lift height is specified on the capacity plate (47), see page 66
B	Transport operation in support arm lift – Maximum capacity in support arm lift (81)
C	Double decker mode – Maximum capacity in mast lift (79) – Maximum lift height in mast lift (80) – Maximum combined capacity of mast lift and support arm lift (83) – Load centre distance (82)

The maximum lift height in mast lift (80) is specified on the capacity plate as of the beginning of 2022.

C Transport and Commissioning

1 Lifting by crane

⚠ WARNING!

All persons involved in loading by crane must be trained

Incorrect crane loading procedures due to untrained personnel can cause the truck to fall. There is a risk of injury to personnel and a risk of material damage to the truck.

- ▶ Loading must only be performed by specialist personnel trained for this purpose. The specialist personnel must be instructed in securing loads on road vehicles and handling load securing devices. In each case correct measurements must be taken and appropriate safety measures applied.

⚠ WARNING!

Improper loading by crane can result in accidents

Improper use or use of unsuitable lifting gear can cause the truck to fall when being loaded by crane.

- ▶ Prevent the truck from hitting other objects during lifting, and avoid uncontrolled movements. If necessary, secure the truck with guide ropes.
- ▶ Loading by crane may only be performed by persons who have been trained in the use of the lifting accessories.
- ▶ Wear personal protective equipment (e.g. safety shoes, hard hat, hi-vis jacket, protective gloves) when loading by crane.
- ▶ Do not stand under suspended loads.
- ▶ Do not enter or stand in the hazardous area.
- ▶ Always use lifting gear with sufficient capacity (observed truck weight in accordance with truck data plate – see page 65).
- ▶ Always secure crane lifting gear to the prescribed attachment points and prevent it from slipping.
- ▶ Use the lifting accessories only in the prescribed load direction.
- ▶ Lifting slings should be fastened in such a way that they do not come into contact with any attachments when lifting.

⚠ CAUTION!

Lowering of the drive frame when lifting the truck

When lifting the truck, the drive frame can lower in the area of the support arm lift. This can cause the truck to move inadvertently.

- ▶ Raise and set down the truck slowly and carefully.
- ▶ Keep the area around the truck clear.

⚠ CAUTION!

Danger of injury from swinging truck

Different battery versions and battery weights can lead to the truck oscillating in a suspended position after being raised.

- ▶ Raise the truck carefully and allow to swing.
- ▶ Keep the hazardous area around the truck clear.

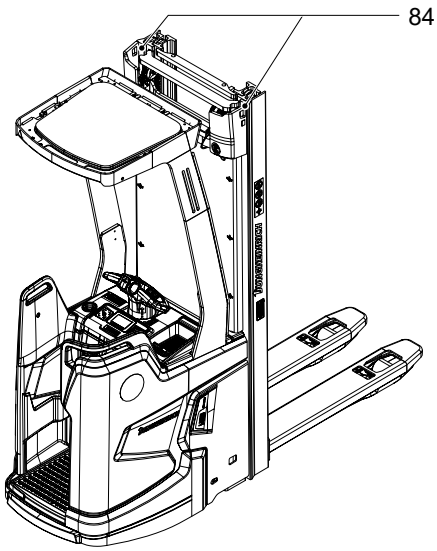

Loading the truck by crane

Requirements

– Truck parked securely, see page 125.

Tools and Material Required

– Lifting gear
– Crane lifting gear

Procedure

• Attach the crane lifting gear to the attachment points (84).

The truck can now be loaded by crane.

2 Transport

⚠ WARNING!

Danger due to uncontrolled movement of the truck or the mast during transport

If the truck and mast are not properly secured during transport, serious accidents can occur. Slipping lashing straps can lead to uncontrolled movements of the truck or mast and even a fall during transport. Accidents caused by this can result in property damage and fatal injuries.

- ▶ Loading must only be performed by specialist personnel trained for this purpose. The specialist personnel must be instructed in securing loads on road vehicles and working with load securing equipment. Correct dimensioning and implementation of load securing measures must be ensured in each individual case.
- ▶ The truck or mast must be professionally and securely fastened when transported on a lorry or trailer.
- ▶ The lorry or trailer must be equipped with lashing rings.
- ▶ Use wedges to prevent the truck from accidentally moving.
- ▶ Use only lashing straps with sufficient tensile strength. Attach the lashing straps so that they cannot slip.
- ▶ Use non-slip materials to secure the transport aids (pallet, wedges, etc.), e.g. non-slip mats.

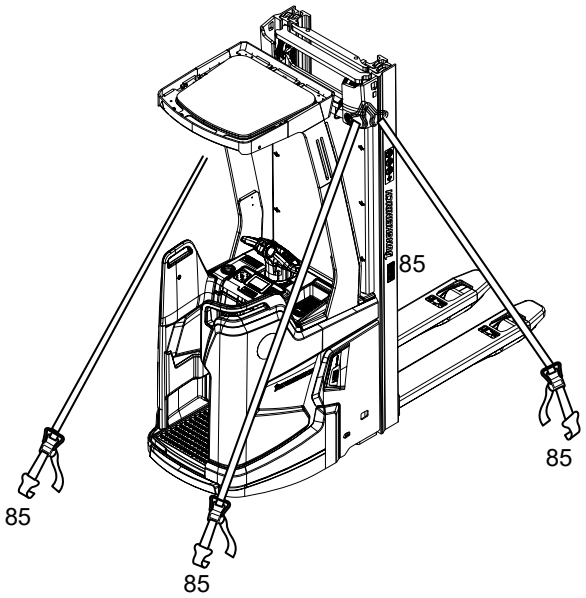

Securing the truck for transport

Requirements

– Truck loaded.
– Truck parked securely, see page 125.

Tools and Material Required

– Lashing straps

Procedure

- Attach the lashing straps (85) to the industrial truck and the transport vehicle and tension sufficiently.

The truck can now be transported.

3 Using the Truck for the First Time

⚠ WARNING!

The use of unsuitable energy sources can be hazardous

Rectified AC current damages the assemblies (controllers, sensors, motors etc.) of the electronic system.
Unsuitable cable connections (too long, wire cross-section too small) with the battery (jump leads) can overheat, setting the battery on fire.

▶ Operate the truck with battery current only.

If the truck is equipped with a display unit (EasyAccess Softkey), the delivery code is marked on a sticker – see page 181.

If the truck is equipped with a keypad (EasyAccess PinCode) or a transponder reader (EasyAccess Transponder), it can only be operated at first by the keys on the display unit – see page 182.

Removing protective films

⚠ CAUTION!

Poor visibility through the protector

The mast protection pane protector can impair the operator's visibility.

▶ Remove the protector (transport retainer) from both sides of the mast protection pane.

If the truck features an overhead guard with protective screen panel (○), the protective film must be removed before initial commissioning of the truck.

Trucks with cold store equipment (○)

Trucks intended for use in cold stores are equipped with hydraulic oil suitable for cold store application and a protective grille instead of a protective screen panel on the mast.

If a truck with cold-store hydraulic oil is used outside the cold store, the lowering speeds may increase.

Commissioning and structure

If the truck is delivered in multiple parts, setup and commissioning must only be performed by trained, authorised personnel.

Wheel flattening

If the truck has been parked for a long period, the wheel surfaces may tend to flatten. This flattening has a negative effect on the safety and stability of the truck. Once the truck has covered a certain distance, the flattening will disappear.

Carrying out initial commissioning

Procedure

- Check the equipment is complete.
- Charge the battery – see page 88.
- Check the hydraulic oil level and top up if necessary – see page 225.
- Commission the truck – see page 122.

Truck is operational.

D Battery - Servicing, Recharging, Replacement

Lithium-ion batteries

The truck is equipped with a lithium-ion battery.

The Jungheinrich lithium-ion batteries are maintenance-free batteries with rechargeable high-performance energy cells. The batteries' daily operating time can be extended through intermediate charges.

Battery management system

The lithium-ion battery is continually monitored by the battery management system. The battery management system checks such things as the cell temperature, the voltage and the charge status of the cells, as well as enabling charge and discharge processes.

Faults or messages warning of approaching critical values are displayed, and the truck is switched off if necessary.

The battery management system is attached to the truck via an interface connector.

➔ The battery management system data can be checked by the manufacturer's customer service department.

1 Safety regulations for handling lithium-ion batteries

⚠ WARNING!

Danger when using unsuitable batteries that have not been approved for the truck by Jungheinrich

The design, weight and dimensions of the battery have a considerable effect on the operational safety of the truck, in particular its stability and capacity. The use of unsuitable batteries that have not been approved for the truck by Jungheinrich, can lead to a deterioration of the braking characteristics of the truck during energy recovery, causing considerable damage to the electric controller and resulting in serious danger to the health and safety of individuals.

▶ Battery equipment may only be replaced with the agreement of Jungheinrich.

▶ Do not use batteries that have not been approved by the manufacturer.

– Do not physically machine or modify the battery.
– Do not open, damage, penetrate the battery or similar.
– Keep the battery away from radiant sources and strong heat sources.
– Observe the specified charging, operating and storage temperature ranges.

Failure to observe these safety instructions can result in fire.

1.1 Correct application

If external influences (e.g. force, fire, flooding) cause unusual conditions or situations, the following instructions must be observed:

– The battery cells inside the lithium-ion battery contain substances that can be flammable if they come into contact with oxygen or water.
– The substances can escape if the battery cells are exposed to high pressure, an external fire or are mechanically damaged by force.
– The amount of these substances is so small that caution is only required in the immediate vicinity of the battery.

1.2 Maintenance

The lithium-ion battery is a wear-free, maintenance-free and gassing-free (emission-free) sealed system.

No maintenance intervals are planned for this lithium-ion battery. For example, no refilling of liquids or other substances is necessary.

The lithium-ion battery is continually monitored by the battery management system.

1.3 Disposal

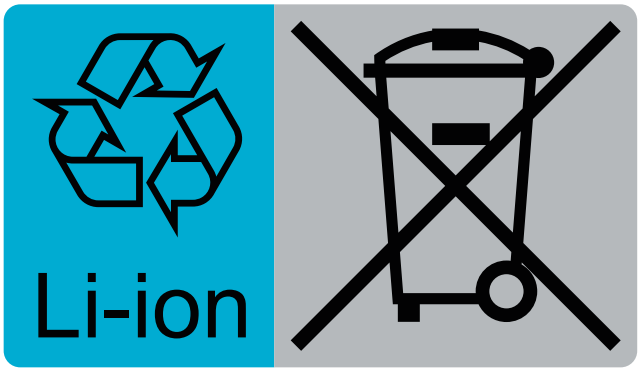

Used lithium-ion batteries are recyclable commodities. As part of a resource-efficient approach, where possible, lithium-ion batteries should undergo reuse, preparation for reuse, preparation for repurposing, repurposing, or reprocessing.

Lithium-ion batteries are classified as waste requiring special monitoring for recycling. Marked with the recycling symbol and the crossed-out wheeled bin, lithium-ion batteries must not be disposed of with household waste.

Buy back or recycling must be ensured, e.g. in accordance with Battery Directive (EU) 2023/1542 . Buy-back terms and the manner of recycling must be agreed with the manufacturer.

Instructions for disposal

To ensure proper treatment and recycling, the owner is legally obliged to dispose of lithium-ion batteries separately from other waste.

- ▶ Lithium-ion batteries must be disposed of in compliance with applicable national environmental protection regulations or disposal laws.
- ▶ For disposal of lithium-ion batteries, contact the manufacturer's customer service department, a customer service department authorised by the manufacturer or an approved certified recycling company.

1.4 Touch voltage hazard

⚠ WARNING!

Touch voltage hazard

Hazardous touch voltages may occur in the event of a technical or mechanical defect on a lithium-ion battery. Touch voltages also occur on seemingly discharged lithium-ion batteries. Touching the battery terminals or live attachments (battery cable, battery connector etc.) can result in dangerous current flows through the body. There is a risk of serious irreversible or fatal injuries.

- ▶ Tag out faulty lithium-ion batteries and take them out of service.
- ▶ Do not touch faulty lithium-ion batteries.
- ▶ Do not place any objects or tools on the lithium-ion battery to avoid short-circuiting the lithium-ion battery.
- ▶ Do not short-circuit the lithium-ion battery.
- ▶ Contact the manufacturer's customer service department or a customer service department authorised by the manufacturer.

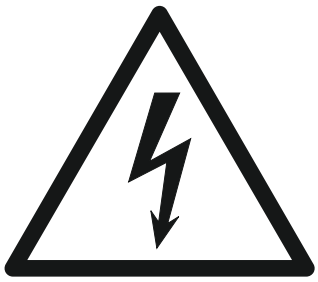

1.5 Measures for fire fighting

Fire-fighting measures may only be carried out on a burning lithium-ion battery by trained and specially equipped fire-fighting personnel (e.g. by a member of the fire brigade).

▶ If possible, drive the truck outside before fighting the fire.

2 Battery types

Depending on the version, the truck is equipped with different battery types. The following table shows the different battery types.

2.1 Integrated Modular Lithium-Ion Battery

Nominal battery data		
Product	Lithium-ion battery 130/260 Ah	
Nominal voltage	25.6 V (3.2 V x 8 cells)	
Number of cells	130 Ah	8 (1 unit with 8 cells)
	260 Ah	16 (2 units each with 8 cells)
Electro-chemical system	Lithium ion, LiFeP04 cathode	

Battery type	Nominal voltage	Capacity	Battery weight
Lithium-ion battery	25.6 V	130 Ah	76 kg
Lithium-ion battery	25.6 V	260 Ah	98 kg

Battery type	Nominal voltage	Capacity	Battery weight
Lithium-ion battery	25.6 V	130 Ah	60 kg
Lithium-ion battery	25.6 V	260 Ah	110 kg

3 Usage and ambient conditions

⚠ WARNING!

Danger of accidents due to regenerative braking fault

Regenerative braking faults can result in extended stopping distances and accidents, particularly when travelling on inclines. Other persons can be injured in the truck's hazardous area.

- ▶ Keep all persons out of the hazardous area during travel operations.
- ▶ Instruct other people to move out of the hazardous area of the truck. Stop working with the truck if people do not leave the hazardous area.
- ▶ In emergencies, use the service brake for braking.

If the temperature is too high or too low, the battery management system shuts down the lithium-ion battery.

Extended exposure to low temperatures causes the lithium-ion battery to cool down, thereby reducing the usable battery capacity.

Observe the permissible application range of the forklift truck – see page 13.

High temperature

In the event of high temperatures (≥ 50 °C), the charging time of the lithium-ion battery is extended due to a reduction in the charge current.

4 Lithium-ion battery data plate

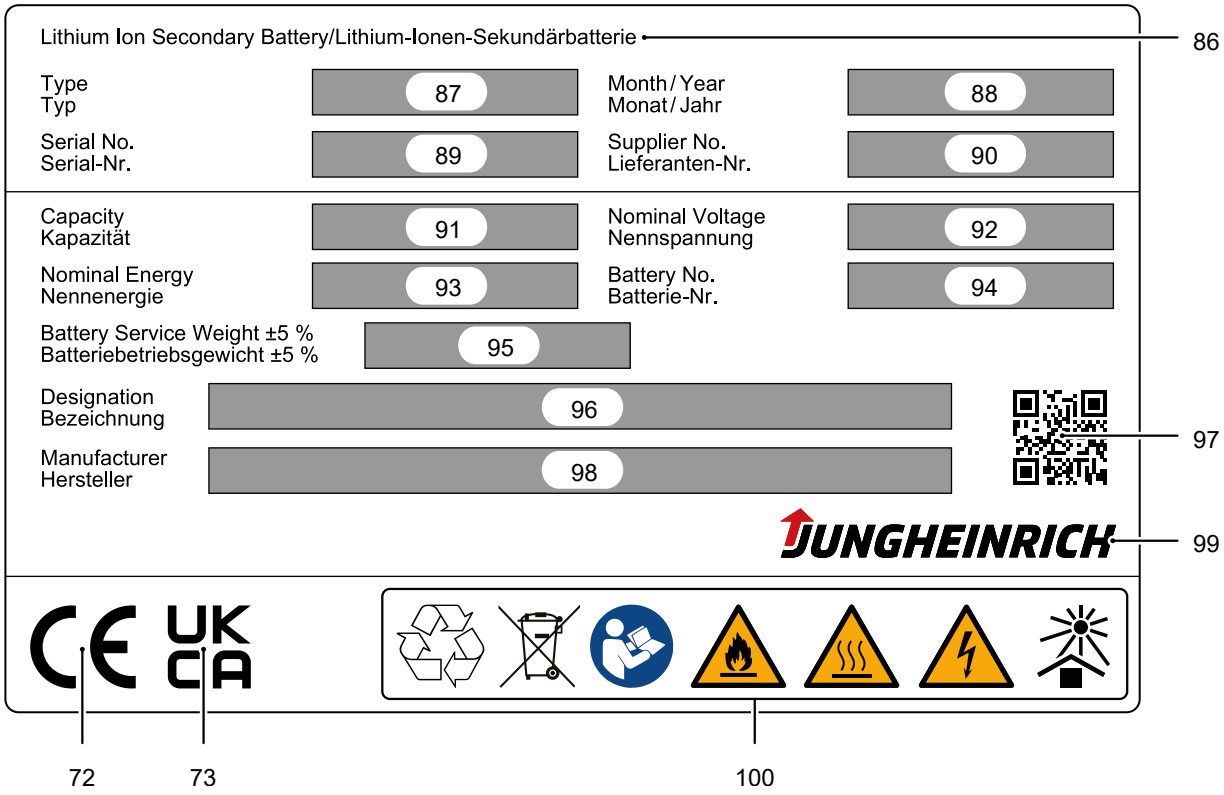

Item	Designation
72	CE mark (*Conformité Européenne*)
86	Lithium-ion secondary battery
87	Battery type
88	Production (year/month)
89	Serial number
90	Supplier number
91	Rated capacity in ampere-hours [Ah]
92	Rated voltage in volts [V]
93	Rated energy (C5) in watt-hours [Wh] – Calculation of the rated energy (C5): rated capacity C5 multiplied by the rated voltage
94	Battery material number
95	Battery weight in kilogrammes [kg] – Tolerance range: 5 %
96	Designation
97	QR code
98	Manufacturer
99	Manufacturer's logo
100	Safety and warning information – see page 86

4.1 Safety and warning information

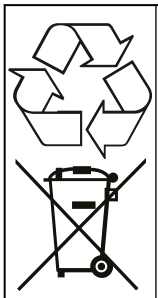	Used batteries are recyclable commodities. These batteries must be treated as hazardous waste. As indicated by the marking showing the recycling symbol and a crossed-out waste bin, batteries must not be disposed of as domestic waste. Buy back or recycling must be ensured, e.g. in accordance with Battery Directive (EU) 2023/1542. Buy-back terms and the manner of recycling must be agreed with the manufacturer.
	Avoid fire and short-circuits due to overheating – Do not ignite or position open flames, glowing embers or sparks near the lithium-ion battery. – Keep batteries away from strong heat sources.
	Hot surfaces – Battery cells can generate very high short-circuit currents, causing them to become hot.
	Hazardous electrical voltage – The metal parts of the battery cells are permanently live. Therefore, do not place any foreign objects or tools on the battery. – Observe the accident prevention regulations and DIN EN 62485-3.
	Observe the operating instructions – The operating instructions must be clearly visible at the charging location. – If any faults are identified on the battery, the battery must no longer be used. Immediately tag out the faulty battery and take it out of service. Contact the manufacturer's customer service department. – Do not attempt to rectify faults independently. – Do not open the battery.
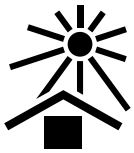	Protect the battery against heat and solar radiation.

5 Exposing the battery

Procedure

- Park the truck securely – see page 125.
- Remove the front panel – see page 222.

The battery is exposed.

6 Removing or installing the battery

➔ The lithium-ion battery is permanently installed. Removal and installation are not foreseen in normal operation.

7 Deeply discharged batteries

Discharging below a certain capacity limit (deep discharge) considerably reduces the service life of the battery.

To protect the battery, the charge status indicator shows only the battery capacity range that can be used for operation, i.e. when the capacity limit is reached, the charge status is shown as 0 %. On some trucks, the lift function is also disabled, the travel speed is restricted to slow travel or a warning notice is shown on the control unit. This reduces the risk of damage to the battery through further discharge.

➔ Fully or partially discharged batteries must be re-charged immediately and not left. To achieve an optimum service life, avoid discharges below the displayed capacity range.

Charging deeply discharged batteries

No charging takes place if the battery is deeply discharged. Deeply discharged batteries cannot be charged by the operator (faulty).

➔ Contact the manufacturer's customer service department.

8 Charging the battery

⚠ WARNING!

Risk of electric shock and fire due to insufficient or inappropriate residual current devices

A lack of residual current devices or the use of inappropriate residual current devices can result in fatal injury due to electric shocks or electrical fires in the event of a fault.

- ▶ The owner must conduct an operational risk assessment of the usage location.
- ▶ An RCD switch (residual current device, circuit breaker) of type B or B+ must be used where necessary.

⚠ WARNING!

Risk of overheating and damage when charging with an unsuitable battery charger

The battery may overheat or sustain damage when using a battery charger with an incompatible voltage, charging capacity or battery technology.

- ▶ Only charge the lithium-ion battery with a battery charger specially approved for this battery. Observe the operating instructions and operating conditions for the battery charger.
- ▶ The battery charger (charging characteristic) and battery parameters must match.
- ▶ For safety information regarding correct behaviour in the event of a fire on or in direct proximity of the battery, see see page 80.

⚠ WARNING!

Risk of accidents and injuries when handling lithium-ion batteries

Improper use can result in overheating, fire or explosion.

- ▶ Do not expose the lithium-ion battery for charging.
- ▶ Do not place any metallic objects on the lithium-ion battery.

If the battery is deeply discharged or if the battery temperature is below the permissible level (+5 °C), the battery will not charge. Deeply discharged batteries cannot be charged by the operator (faulty). Contact the manufacturer's customer service department.

Enabling of the charging process by the battery management system

The battery management monitors the temperature of the lithium ion battery. If the battery temperature is outside the permissible range, charging will not start. As soon as the temperature is within the permissible range, battery charging starts automatically.

Simultaneous charging with two battery chargers

Simultaneous charging with two battery chargers (the stationary battery charger and the on-board charger) is not permitted.

Trickle charge

A fully charged lithium-ion battery can be connected to the battery charger for automatic trickle charging.

In the event of an extended period out of use, it is recommend that the trickle charge function of the battery charger be used in order to maintain the available capacity of the battery.

Partial charging

Charging can be interrupted on the battery charger and continued as partial charging. The charging process is automatically adapted to the charge status of the battery; see the operating instructions for the battery charger. This keeps battery wear to a minimum.

Mains failure

Charging continues automatically after a mains failure.

Intermediate charging

Intermediate charging of the lithium-ion battery

A lithium-ion battery that is not fully discharged can be partially or fully recharged at any time. Note the following information to ensure reliable function of the lithium-ion battery:

- ▶ In the event of frequent intermediate charging, charge the lithium-ion battery fully every 4 weeks. If the battery charger features the "balancing" function, make sure that the balancing phase at the end of charging is completed. For further information on the "balancing" function, refer to the operating instructions for the battery charger.
- ▶ Turn off the battery charger before disconnecting the lithium-ion battery from the battery charger. Manual interruption of the charging process: see page 88. When the lithium-ion battery is fully charged, charging ends automatically.

The lithium-ion battery can be partially charged (compensation charging) each time there is a break in use, without limiting its service life.

8.1 Activating the Lithium-Ion Battery

If the lithium-ion battery is not used for several hours, it switches to energy-saving mode to protect against deep discharge.

The lithium-ion battery can be reactivated by connecting it to the stationary battery charger, see page 90.

8.2 Charging the battery with a stationary battery charger

⚠ WARNING!

Risk of injury due to use of an unsuitable battery charger.

Voltage peaks may occur when using a battery charger with an incompatible voltage, charging capacity and battery technology. Voltage peaks can permanently damage the battery charger, truck and battery Spark formation and uncontrolled movement of electronically controlled components may cause injury.

- ▶ The battery may only be charged with the Jungheinrich battery charger designed for this battery.
- ▶ Use only battery chargers approved by the manufacturer.

⚠ WARNING!

Risk of overheating and damage when charging with an unsuitable battery charger

The battery may overheat or sustain damage when using a battery charger with an incompatible voltage, charging capacity or battery technology.

- ▶ Only charge the lithium-ion battery with a battery charger specially approved for this battery. Observe the operating instructions and operating conditions for the battery charger.
- ▶ The battery charger (charging characteristic) and battery parameters must match.
- ▶ For safety information regarding correct behaviour in the event of a fire on or in direct proximity of the battery, see see page 80.

The stationary battery charger can only charge suitable lithium-ion batteries with a battery management system, not standard batteries.

➔ Observe the battery charger operating instructions.

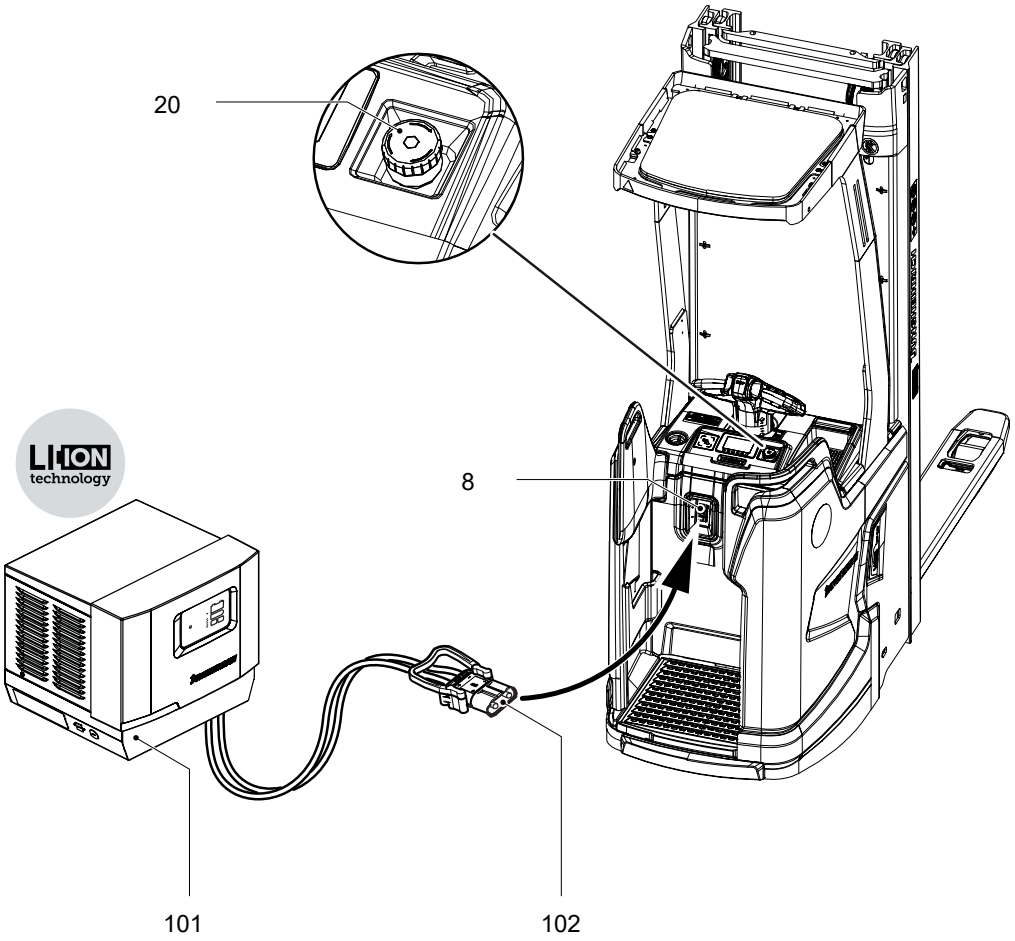

Charging the battery

Requirements

– Battery charger operational.
– Truck parked securely – see page 87.

Procedure

- Check the cable and charge connector (102) of the battery charger (101) for visible damage before charging.

➔ If damage is identified, mark the affected battery charger and take out of service. Have the battery charger repaired by the manufacturer or by a specialist authorised by the manufacturer.

- Insert the charge connector (102) of the battery charger (101) into the comfort charging socket (8) on the truck.
- Start charging in accordance with the battery charger operating instructions.
- If the charge status is to be displayed on the truck:
  - Unlock the emergency disconnect switch (20) – see page 134.

    The display unit displays the charge status or a fault – see page 105.

The battery is charging.

➔ While the charge connector of the stationary charger is connected to the truck, the electrical functions of the truck are disabled (electric immobiliser). The truck cannot be operated in this case.

Ending battery charging

⚠ WARNING!

There is a danger of sparks if charging is improperly interrupted

Owing to the high charge currents, there is a risk of spark discharge if the charge connector is removed while charging is active. There is a risk of injury and of damage to the electrical contacts.

▶ Stop charging on the battery charger before removing the charge connector.

▶ Do not disconnect the mains cable or charge connector of the battery charger while charging (under load).

Procedure

- Complete charging in accordance with the battery charger operating instructions.
- Remove the charge connector of the battery charger (102) from the comfort charging socket (8) on the truck.

Battery charging is complete.

8.3 Charging the battery with an on-board charger

⚠ DANGER!

Risk of electric shock and fire

Damaged and unsuitable cables can cause electric shocks and can overheat, resulting in fires.

- ▶ Always use mains cables with a maximum length of 30 m. Local regulations must be observed.
- ▶ Unwind the cable reel fully when using it.
- ▶ Always use original manufacturer's mains cables.
- ▶ Insulation safety, acid and caustic ratings must comply with the manufacturer's mains lead.
- ▶ The charging connector must be dry and clean when used.

⚠ WARNING!

Danger due to damage to the on-board charger or live attachments

Damage to the on-board battery charger or live attachments (mains cable, plug) can cause a short circuit or electric shock.

- ▶ Report any defects immediately to your supervisor.
- ▶ Notify the customer service department.
- ▶ Mark the defective truck accordingly and take it out of service.
- ▶ Do not return the truck to service until the fault has been identified and rectified.

NOTICE

Material damage due to incorrect use of the on-board charger

- ▶ The on-board charger must not be opened. In the event of faults, contact the manufacturer's customer service department.
- ▶ The battery charger must only be used for the batteries supplied or other approved batteries provided they have been adapted by the manufacturer's customer service department.
- ▶ Batteries must never be swapped from truck to truck.
- ▶ Do not connect the battery to two chargers simultaneously.

Immobiliser

⚠ WARNING!

Moving of a connected industrial truck with the mains socket switched off

If an industrial truck is being charged at an external mains socket, the automatic immobiliser detects this process and deactivates the truck travel functions. When charging an industrial truck at a mains socket that can be switched off, the industrial truck can start moving when the socket is switched off because the immobiliser detects only live mains sockets. This can cause damage to the electrical building installation as well as electric shocks and electrically induced fires.

- ▶ Before commissioning the truck, disconnect the mains cable from the mains socket and stow away in the designated position on the truck.
- ▶ If no additional protection measures are taken, the truck must not be charged via the on-board charger using a mains socket that can be switched off.
- ▶ This warning must be taken into account during the risk analysis performed by the operating company.

As long as the mains plug of the on-board charger is connected to the mains, all of the truck's electrical functions are disabled (electrical immobiliser). The truck cannot be operated.

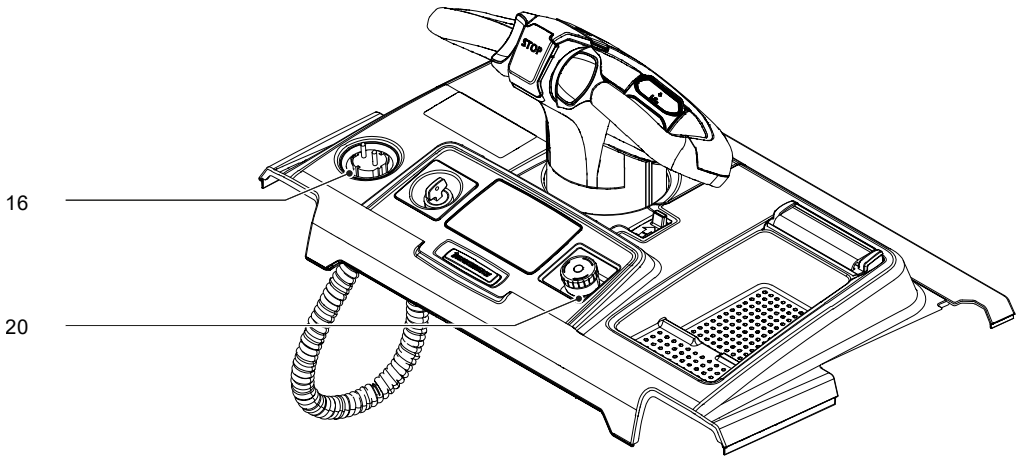

Charging the battery

Requirements

– Truck parked securely – see page 125.

Procedure

- Check the cable and mains plug (16) of the on-board charger for visible damage before charging.
  If damage is identified, mark the truck accordingly and take it out of service. Have the truck repaired by the manufacturer or by a specialist authorised by the manufacturer.
- Plug the mains connector (16) into a mains socket.
- Unlock the emergency disconnect switch (20) – see page 134.
  The control panel displays the charge status or a fault – see page 105.

The battery is being charged.

➔ Charging does not take place if the emergency disconnect switch (20) is actuated.

Ending the charging process

- Remove the mains plug (16) from the mains socket and stow it fully in the storage compartment on the truck along with the mains cable.

Charging complete.

➔ If the charging process is interrupted, the full battery capacity will not be available.

E Operation

1 Safety Regulations for the Operation of Forklift Trucks

Hazardous area

⚠ WARNING!

Risk of accidents/injury in the hazardous area of the truck

A hazardous area is defined as the area in which people are at risk due to travel or lifting operations of the truck, its load handler or the load. This also includes the area within reach of falling loads or lowering/falling operating equipment.

- ▶ Instruct unauthorised persons to leave the hazardous area.
- ▶ In case of danger to third parties, give a warning signal in good time.
- ▶ If unauthorised persons are still within the hazardous area, stop the truck immediately.

⚠ WARNING!

Removing or disabling safety devices can cause accidents

Removing or disabling safety devices such as the Emergency Disconnect switch, key switch, buttons, horn, strobe lights, mast protection pane, mast grille, sensors, panels etc. can result in accidents and injury.

- ▶ Report any defects immediately to your supervisor.
- ▶ Mark defective truck and take out of service.
- ▶ Do not return the industrial truck to service until you have identified and rectified the fault.

Emergency stop safety concept

⚠ CAUTION!

Automatic braking can cause accidents

If the truck detects that signals which are required have not been received, or if it detects an error, the system reacts by triggering an emergency stop, either by braking the truck to a halt or until a valid signal status has been reached.

- ▶ Remain at a suitable distance from the truck during operation.

Safety devices, warning signs and warning instructions

Safety devices, warning signs (see page 61) and warning instructions in the present operating instructions must be strictly observed.

Driver authorisation

The truck may only be used by suitably trained personnel, who have demonstrated to the proprietor or his representative that they can drive and handle loads and have been authorised to operate the truck by the proprietor or his representative.

Operator’s rights, responsibilities and rules of conduct

The driver must be informed of his duties and responsibilities and be instructed in the operation of the truck and shall be familiar with the operating instructions. Safety shoes must be worn on pedestrian-operated trucks.

Do not allow unauthorised persons to use the truck

The operator is responsible for the truck during the time it is in use. The operator must prevent unauthorised persons from driving or operating the truck. Do not carry passengers or lift other people.

When leaving the industrial truck, the operator must ensure that the industrial truck is secured against unauthorised use, e.g. remove the key or keep the access code secret.

Damage and defects

The supervisor must be informed immediately of any damage or faults to the truck or attachment. Trucks which are unsafe for operation (e.g. wheel or brake problems) must not be used until they have been rectified.

Repairs

The operator must not carry out any repairs or alterations to the truck without authorisation and the necessary training to do so. The operator must never disable or adjust safety mechanisms or switches.

Personal protective equipment

It is recommended that safety shoes be worn at all times when using the truck to avoid injuries.

2 Displays and controls

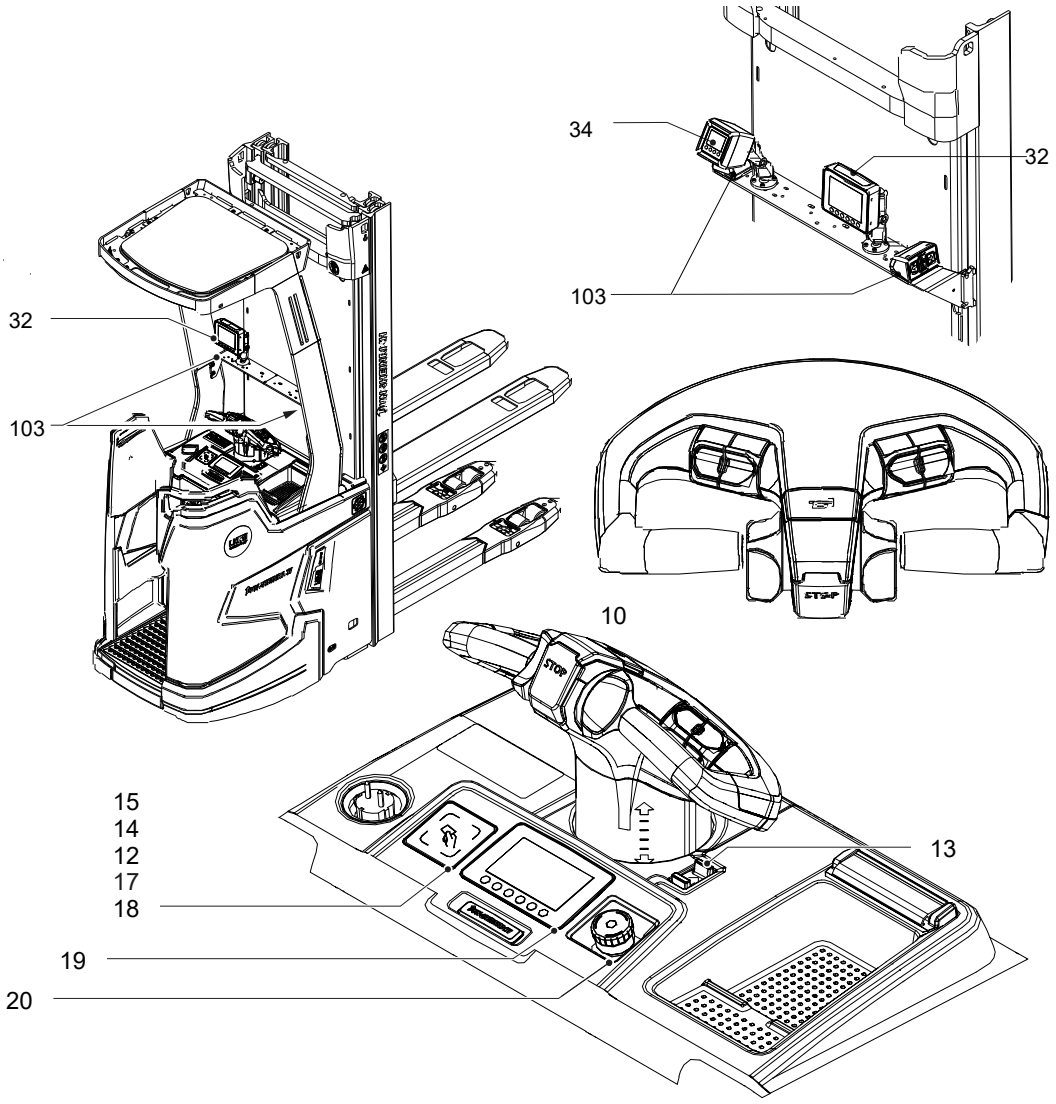

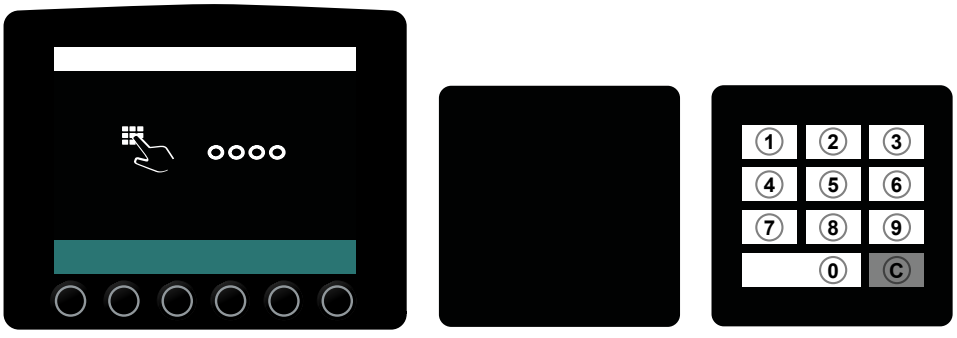

19 14 12



18 15 17

Item	Control/display		Function
10	Tiller	●	Controls lift and travel functions.
12	Keypad	○	Replaces the key switch. – Solely to expand the display unit – Releasing the truck by entering setup and access codes with EasyAccess PinCode access system
13	Tiller height adjustment	●	Tiller height adjustment allows the operator to adjust the height of the tiller to suit ergonomic requirements.
14	Panel	○	The panel is used in the event of access control via the display unit (EasyAccess Softkey).
15	Transponder reader	○	Replaces the key switch. – Solely to expand the display unit – Releasing the truck by card/transponder with EasyAccess Transponder access system
17	Transponder reader Plus	○	Replaces the key switch. – Solely to expand the display unit – Releasing the truck by card/transponder with EasyAccess Transponder access system – The transponder reader Plus supports additional transponder standards
18	Key switch and key	●	Used to switch the truck on and off. – Removing the key can prevent the truck from being switched on by unauthorised personnel.
19	Display unit with 4-inch display	●	The display unit with 4-inch display provides the operator with all important information and enables control of the truck functions. – Used to enter the access code for the EasyAccess Softkey access system

Item	Control/display		Function
20	Emergency disconnect switch	●	Used to brake the truck with maximum force and to interrupt the truck functions in an emergency. Activating the emergency disconnect switch disables all electrical functions in hazardous situations.
32	Display unit with 6-inch display	○	The display unit with 6-inch display serves as an additional display for assistance systems and simplifies control of the assistance and basic functions of the truck.
34	Pre-Op Check display unit	○	Displaying the digital checklist for the Pre-Op Check – Performing and logging a digitally guided status check for the industrial truck – Only available in conjunction with the Jungheinrich Fleet Management System. – For further information on the Pre-Op Check, see the "Jungheinrich Fleet Management System" operating instructions.
103	Touch-mode control unit	○	Enables operation of certain travel and lift functions from an operating position at the side of the truck.

Trucks that are equipped with the optional fleet management system are released with a transponder. Further information on the transponders and on how to operate the fleet management system can be found in the relevant operating instructions.

2.1 Key switch

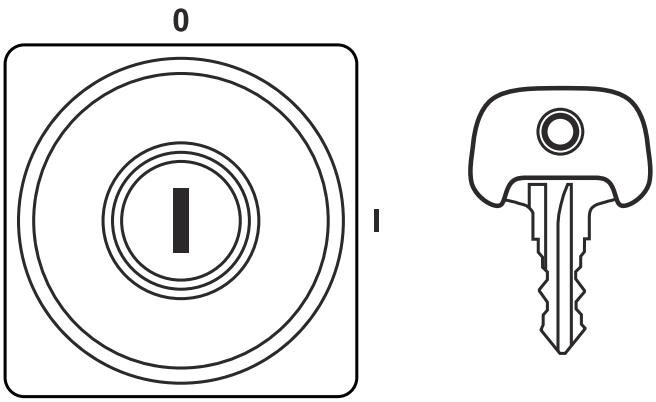

The key switch is used to switch on and off a truck with standard equipment. When the key is removed, this prevents the truck from being switched on by unauthorised personnel.

Key position 0: Truck switched off.

Key position I: Truck switched on and ready for operation.

2.2 Tiller

Depending on the truck version, there are two possible versions of the tiller.

ERC 214zi-216zi

smartPILOT version for fork and support arm lift with one rotary button each for operating support arms and load fork on both sides.

ERC 214i-216i, ERC 214bi-216bi

smartPILOT version for fork lift with a wide rotary button to operate the load fork on both sides.

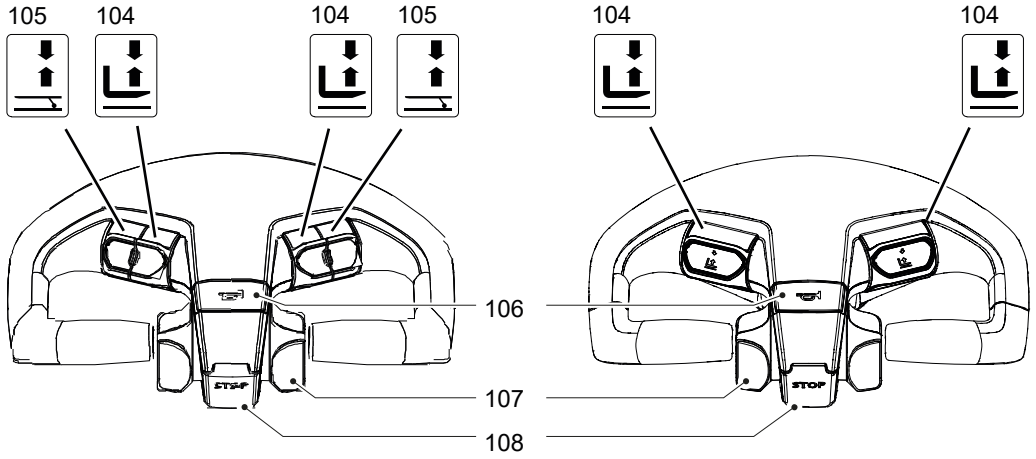

Item	Control/display		Function
104	"Fork lift" button	●	Used to raise or lower the load fork.
105	"Support arm lift" button (on ERC 214zi-216zi)	○	Used to raise or lower the support arms.
106	"Warning signal" button (horn)	●	Used to trigger the warning signal (horn).
107	Travel switch	●	Controls travel direction and travel speed.
108	STOP button	●	Use to stop the truck.

2.3 Touch-Mode Control Unit

The touch-mode control unit version depends on the truck equipment. The control unit can be equipped with buttons for travel in the load or fork direction and with buttons for lifting or lowering the load handler. Any combination is possible.

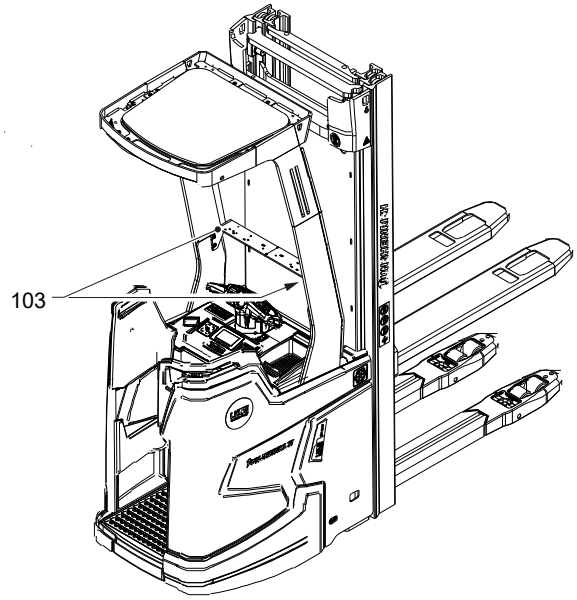

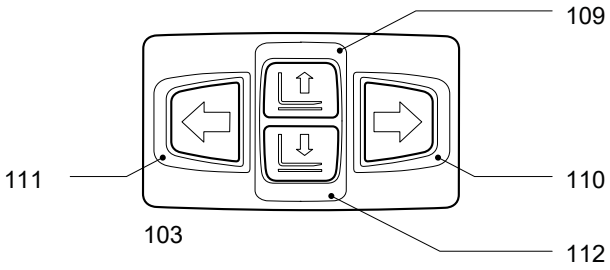

Item		Control/display	Function
109	●	"Raise load fork" button	Lifting of the load fork in ride-on mode or touch mode.
110	○	"Touch mode load direction" button	Travelling with reduced acceleration and at reduced speed in the load direction in touch mode (max. 4 km/h).
111	○	"Touch mode drive direction" button	Travelling at reduced speed in the drive direction in touch mode (max. 4 km/h).
112	●	“Lower load fork” button	Lowering of the load fork in ride-on mode or touch mode.

2.4 Display unit with 4-inch display

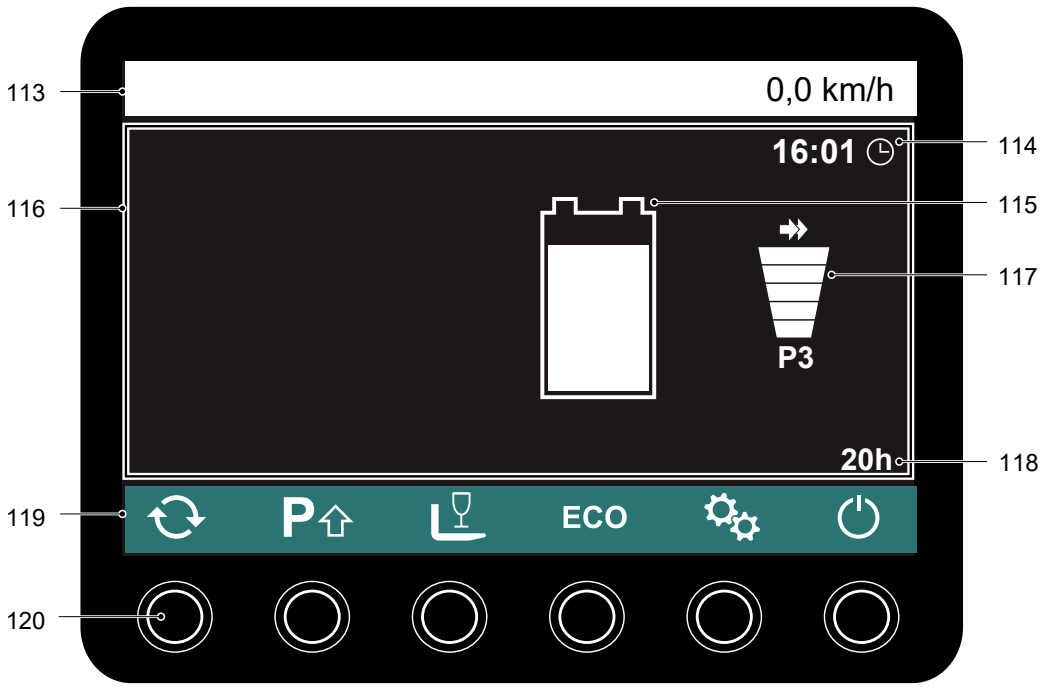

The 4-inch display shows all information important to the operator and enables control of the truck functions.

Item	Display or control element	Function
113	Information field	Displays event messages and optional information such as speed – see page 106.
114	Time display	Displays the current time.
115	Battery charge status	The higher the fill level on the charge status indicator, the higher the residual capacity of the battery.
116	Area for display symbols	Area for information concerning operation of the truck. The symbols shown depend on the operating situation and the truck status – see page 106.
117	Travel-program display	Displays the current travel program. The selected travel program is also shown in text form (P1, P2, P3) under the bar display.
118	Service-hours display	Displays the current number of service hours.
119	Function symbols	The functions shown as function symbols are operated using the function key located underneath, see page 111.
120	Function keys	The function keys are used to operate the functions shown as function symbols above.

2.4.1 Information field

Display of event messages

Current event messages are shown in the left section of the information line (113).

→ Further information on the event messages shown: see page 165.

Speed display (○)

The right section of the information line shows the truck speed in km/h or mph.

→ The setting for the displayed units can be configured by the manufacturer's customer service department.

2.4.2 Display symbols

Pictograms that appear in connection with the Pre-Op Check are explained in the "Jungheinrich Fleet Management System" operating instructions.

Symbol	Meaning	Colour	Function
	Warning	Yellow	Lights up in the case of an operating error.
		Red	Lights up in the case of a truck fault. Travel is restricted to slow travel or lift, lower and travel functions are reduced.
	Emergency stop	Red	Lights up in the case of automatic function deactivation due to truck malfunctions.
	Service note	Yellow	Lights up when maintenance is due.
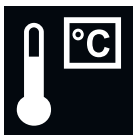	Truck overtemperature	Yellow	Lights up when the temperature of the truck exceeds the permissible range. – Lifting, lowering and travel functions are reduced.
		Red	Lights up when the temperature of the truck exceeds the permissible range. – Lifting, lowering and travel functions are deactivated.

Symbol	Meaning	Colour	Function
	Lithium-ion battery low temperature	Yellow	Lights up to indicate a low temperature of the lithium-ion battery – Discharge currents and energy recovery are reduced.
		Red	Lights up to indicate a low temperature of the lithium-ion battery – The truck is switched off via the battery contactor. – The display unit switches off.
	Lithium-ion battery overtemperature	Red	Lights up to indicate an overtemperature of the lithium-ion battery
	Mute	Yellow	Illuminates when the transmitter (○) is muted. No warnings or signals are sounded.
	Stand-on platform presence switch	Yellow	Illuminates if the stand-on platform is not under load when the travel switch is actuated.
			Flashes in the event of a platform-switch time-out (monitoring function) – see page 165.
			Flashes when the light barrier of the foot protection (○) is interrupted (monitoring function) – see page 165.
	Lift deactivated	Yellow	Lights up if the lift functions are deactivated due to insufficient battery capacity or if the lift function has not been released.
	Active rack height select (positionCONTROL)	Green	Shows the currently active rack height select. On the symbol shown, lift height 3 is active.
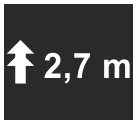	Active rack height select (positionCONTROL)	White	Shows the height to which the active rack height select is assigned. In the example shown, this is 2.7 m.
	Active rack type preselection (positionCONTROL)	Green	Shows the currently active rack type preselection. On the symbol shown, rack type A is active.
	Touch mode	Yellow	Lights up when a travel request from touch mode is present. (Also displayed if the steer angle is outside the permissible range)
		Green	Lights up when touch mode is ready. (Steer angle in permissible range)

Symbol	Meaning	Colour	Function
	Lift end, load fork	yellow	Illuminates if the “Raise load fork” button is pressed when the lift limit in the mast lift has been reached.
		green	
	Lowering end, load fork	yellow	Illuminates if the “Lower load fork” button is pressed when the lowering limit in the mast lift has been reached.
	Lift limit, support arm lift	Yellow	Illuminates if the “Raise support arm lift” button is pressed when the lift limit in the support arm lift has been reached.
	Lowering limit, support arm lift	Yellow	Illuminates if the “Lower support arm lift” button is pressed when the lowering limit in the support arm lift has been reached.
	Battery indicator, low residual capacity	Yellow	Lights up when residual capacity ≤ 30% Charge the battery soon.
		Red	Lights up when residual capacity ≤ 20 % Charge the battery immediately.
	Eco mode	Green	Lights up when the energy-saving travel program is active.
	Indicator lamp	Green	Illuminated when at least one indicator lamp is switched on.
	Slow travel	Yellow	Lights up when the travel speed is reduced by the control unit of the industrial truck (e.g. optional when the load handler is completely lowered)
			Lights up when the operator reduces the travel speed ("slow travel" button pressed).
	Fine weighing	Green	Illuminates when the "fine weighing" function is active.
			Flashes during a measurement movement.
		Yellow	Illuminates when tare mode is active.
			Flashes during a measurement movement while taring.
	Fine weighing measurement movement	Grey	Appears during a measurement movement in place of the weight.

Symbol	Meaning	Colour	Function
	Impact display (equipment with fleet management system)	Yellow	Lights up when a moderate shock event has occurred. – Slow travel is triggered.
		Red	Lights up when a serious shock event has occurred. – Lifting and travel functions are deactivated.
	Soft lifting and lowering	Green	Lights up when the "Soft lifting and lowering" function is active.
	Overload at pressure sensor	Yellow	Lights up when the picked-up load slightly exceeds the permissible weight.
		Red	Lights up when the lift function of the truck is deactivated due to an excessive overload.
	“Automatic support arm lift lowering” function active	Green	Lights up green when the function for automatic lowering of the support arm lift is active.
	The support arms are lowered.	Flashes yellow	Flashes yellow while the support arms are being lowered by the "automatic support arm lift lowering" function.
	Lift height limit reached	Yellow	The mast-lift lift limit has been reached. The lift limit cannot be circumvented.
	Lift height limit reached	Flashing green	The mast-lift lift limit has been reached. The lift limit can be circumvented.
	Missing lift height signals	Flashing yellow	Flashes when sensor signals from the mast time out (monitoring function) – see page 165.
	Collision switch deactivated	Yellow	Illuminates when the collision safety switch is deactivated for ride-on mode.
	Assistance system not ready	Yellow	Lights up when an assistance system of the truck is not ready.
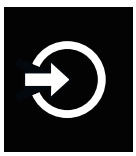	Login with additional equipment	White	Lights up when waiting for user authentication on additional equipment (○).
		Green	
		Yellow	
		Red	
	Slow travel	Green	Lights up when slow travel is activated via an external interface (e.g. by the fleet management system).
		Yellow	
		White	

Symbol	Meaning	Colour	Function
	Double-click lifting: Continuous lifting up to intermediate height or lift limit	Green	Lights up to indicate operational readiness of the automatic lift function.
		Yellow	Flashes when the load handler is raised via the automatic lift function.
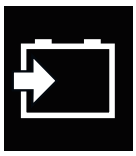	Charging process	Green	Shows information on battery charging (trucks with on-board charger). – Flashing: Charging process, readiness for charging – Lit: Charging complete
		Red	Shows information on battery charging (trucks with on-board charger). – Charging interrupted
	Truck disabled	Yellow	Lights up when the truck has been disabled due to a serious event. Possible causes: – Error in the drive system – Error in the hydraulic system – Shock event (truck with fleet management system)

2.4.3 Function Symbols

Symbol	Meaning	Function
	Function selection	Switches through the various functions and displays of the display unit.
	Travel program	Switches through the various travel programs of the truck.
	Soft lifting and lowering	Activates or deactivates the “Soft lifting and lowering” function.
	ECO mode	Activates or deactivates ECO mode.
	Settings	Opens the Settings menu.
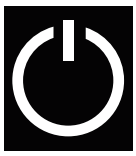	ON/OFF	Switches the truck on and off.
	Floor-Spot	Activates or deactivates the Floor-Spot.
	Beacon	Activates or deactivates the beacon. ➔ The beacon must be actively switched on or off. The last switching position remains active.
	Laser fork height display	Activates or deactivates the laser fork height display.
	Rack type preselection (positionCONTROL)	Switches through the preset rack types.
	SNAP (positionCONTROL)	Activates or deactivates the SNAP function.

Symbol	Meaning	Function
	Rack height select (positionCONTROL)	Switches through the preset lift heights.
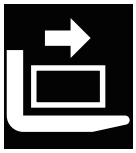	Storage Support (positionCONTROL)	Activates or deactivates the storage support.
	Fine weighing	Press briefly: Activates or deactivates the "fine weighing" function.
		Hold down (approx. 3 seconds): Activates tare mode.
	Load centre (operationCONTROL)	Switches through the various load centre presettings.
	Collision safety switch	Deactivates the collision safety switch for rider mode until the next time the truck is started. A deactivated collision safety switch can also be reactivated by pressing the function button once more.

Settings menu

Symbol	Meaning	Function
	Back	Cancels the current operation and returns to the previous menu.
	Edit access code/ transponder	To add or delete access codes or transponders.
	Changing the Set-up Code	To change the set-up code and to activate the keypad or the transponder reader.
	Log-in History	Shows the log-in history in chronological order.

Submenus

Symbol	Meaning	Function
	Confirm	To confirm an entry or a transponder code.
	Adding	To add new access codes.
	Delete	To delete selected access codes.
	Selection up	For selecting the access codes or transponders and to scroll back during the log-in process.
	Selection down	For selecting the access codes or transponders and to scroll forward during the log-in process.

2.4.4 Using the Display:

2.4.4.1 Switching on the truck with an access code

Procedure

- Release the emergency disconnect switch, see page 134.
- Enter the access code with the buttons below the display (121).

The truck is switched on.

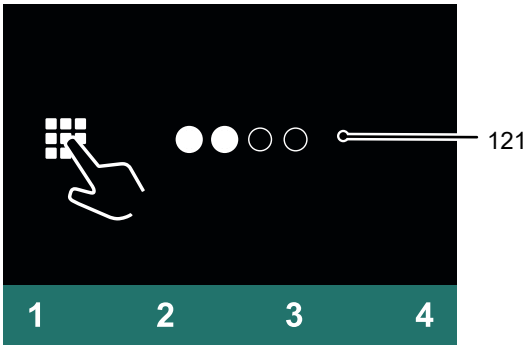

2.4.4.2 Switching off the truck

Procedure

- Press the key under the "Switch off" symbol (122) in the display unit.
- Press the Emergency Disconnect switch, see page 134.

The truck is switched off.

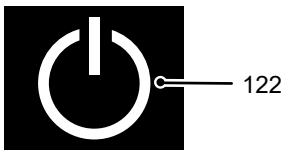

2.4.4.3 Changing the set-up code

Requirements

– The truck is switched on, see page 114.

Procedure

- Press the key below the "Settings" symbol (123).
- Press the key below the "Change set-up code" symbol (124).
- Enter the set-up code using the keys below the display unit (121).

  The set-up code entered is shown as filled-in circles.
- Press the key below the "Delete" symbol (125).

  The set-up code is deleted.
- Enter the new set-up code using the keys below the display unit (121).

➔ The new set-up code must be different from existing access codes.

- Press the key below the "Confirm" symbol (126).

  The new set-up code is displayed.

➔ If the new set-up code has been entered incorrectly, delete it and add a set-up code again.

To return to the main menu, press the key below the "Back" symbol (127).

The set-up code has been changed.

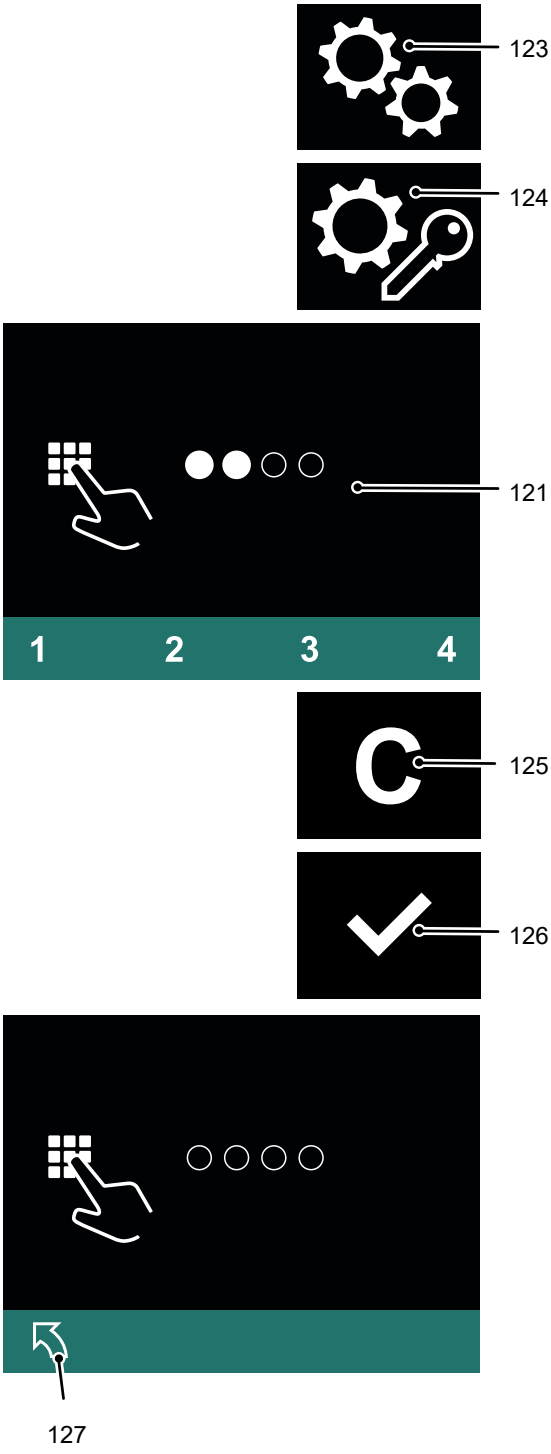

2.4.4.4 Adding a new access code

Requirements

– The truck is switched on, see page 114.

Procedure

- Press the key below the "Settings" symbol (123).
- Press the key below the "Edit access code" symbol (128).

  The set-up code is requested.
- Enter the set-up code using the keys below the display unit (121).

  All the access codes are displayed.
- Press the key below the "Add" symbol (129).
- Enter the new access code using the keys below the display unit (121).

The new access code must be different from existing access codes.

- Press the key below the "Confirm" symbol (126).

  The new access code is displayed.

If the new access code has been entered incorrectly, delete it, see page 117, and add an access code again.

To return to the main menu, press the key below the "Back" symbol (127).

A new access code has been added.

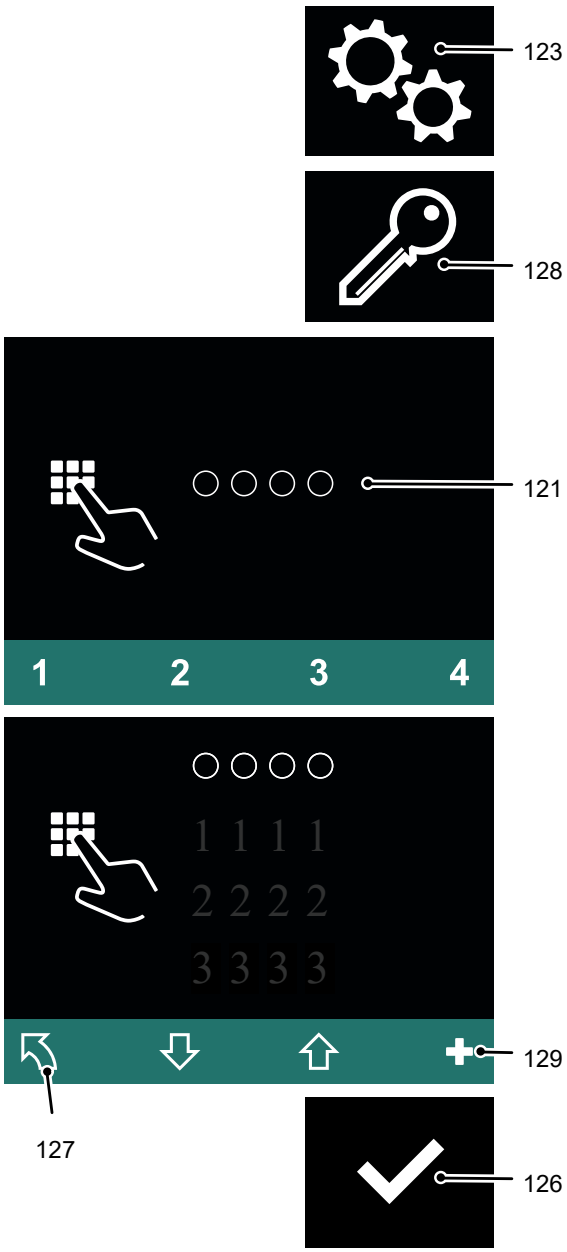

2.4.4.5 Deleting an access code

Requirements

– The truck is switched on, see page 114.

Procedure

- Press the key below the "Settings" symbol (123).
- Press the key below the "Edit access code" symbol (128).

  The set-up code is requested.
- Enter the set-up code using the keys below the display unit (121).

  All the access codes are displayed.
- Select the access code to be deleted using the key below the "Down selection" symbol (130).
- Press the key below the "Delete" symbol (125).

  The access code has been deleted.
- To return to the main menu, press the key below the "Back" symbol (127).

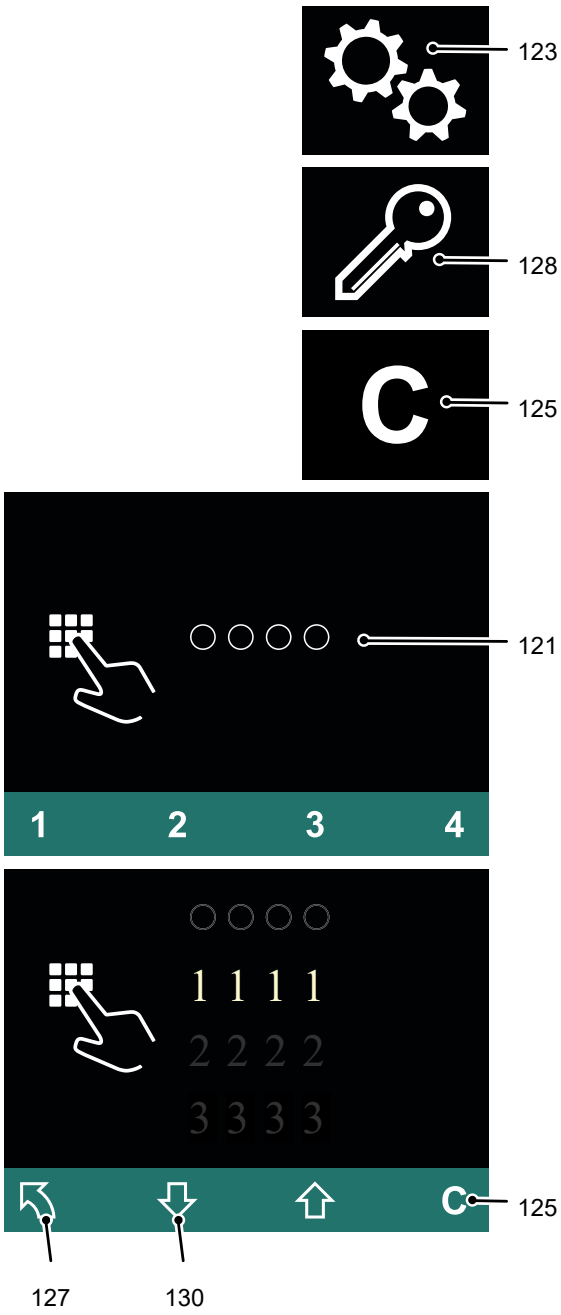

2.4.4.6 Displaying the log-in history

The use of the last different access codes is displayed during the log-in process. The last log-in is displayed first.

If multiple access codes are logged as being displayable simultaneously, the display area can be moved by scrolling forward or back.

Requirements

– The truck is switched on, see page 114.

Procedure

- Press the key below the "Settings" symbol (123).
- Press the key below the "Log-in process" symbol (131).
- Enter the set-up code using the keys below the display unit (121).
  The set-up code entered is shown as filled-in circles.
- To scroll forward, press the button under the "Down selection" symbol (130) as many times as necessary.
  The display area moves: Additional earlier log-ins are displayed.
- To scroll back, press the button under the "Up selection" symbol (132) as many times as necessary.
  The display area moves: More recent log-ins are displayed.
- To return to the main menu, press the key below the "Back" symbol (127).

The log-in process is displayed.

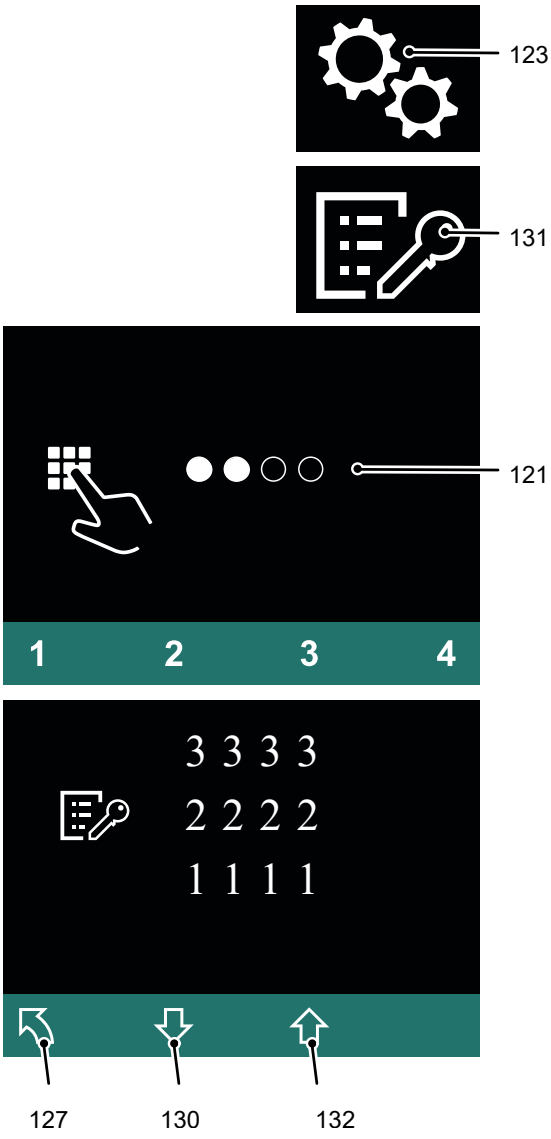

3 Preparing the Truck for Operation

3.1 Checks and Operations to Be Performed Before Starting Daily Work

⚠ WARNING!

Damage and other truck or attachment (optional equipment) defects can result in accidents.

If damage or other truck or attachment (optional equipment) defects are discovered during the following checks, the truck must be taken out of service until it has been repaired.

▶ Report any defects immediately to your supervisor.

▶ Mark defective truck and take out of service.

▶ Do not return the industrial truck to service until you have identified and rectified the fault.

Procedure

- Check the entire truck from the outside for damage and leaks.
  - Decommission the truck if the hydraulic system is leaking. Note the instructions for hydraulic system repair, see page 211.
- Check the load handler for visible signs of damage such as cracks, bent or severe wear.
- Check the drive wheel and load wheels for damage, see page 210.
- Check the markings and labels for completeness and legibility – see page 61.
- Check the protective screen panel, load backrest and overhead guard for firm seating and damage, see page 21.
- Ensure that the drive panels and covers are secure and check for damage.
- With the load handler lowered, check that the mast chains are tensioned and secured correctly.
- Ensure that the tiller is engaged at a fixed height (tiller height adjustment), see page 120.
- Ensure that all operating elements independently return to their original positions after actuation.

Equipment-specific checks

- Trucks with on-board charger (○): Check the mains cable of the on-board charger for damage.

  If damage is identified, mark the truck accordingly and take it out of service. Have the truck repaired by the manufacturer or by a specialist authorised by the manufacturer.

- Check that the fork arms are correctly adjusted and secured – see page 203.
  - Make sure the retaining bolts are fitted.
  - Make sure that the fork-arm stops are fully secured.

3.2 Setting up the operator position

3.2.1 Tiller Height Adjustment

⚠ CAUTION!

Danger due to inadvertent steering movements.

▶ Before travel, ensure that the locking lever for the tiller height adjustment is secured.

▶ Adjust only when the truck is switched off. Never adjust the tiller height during travel.

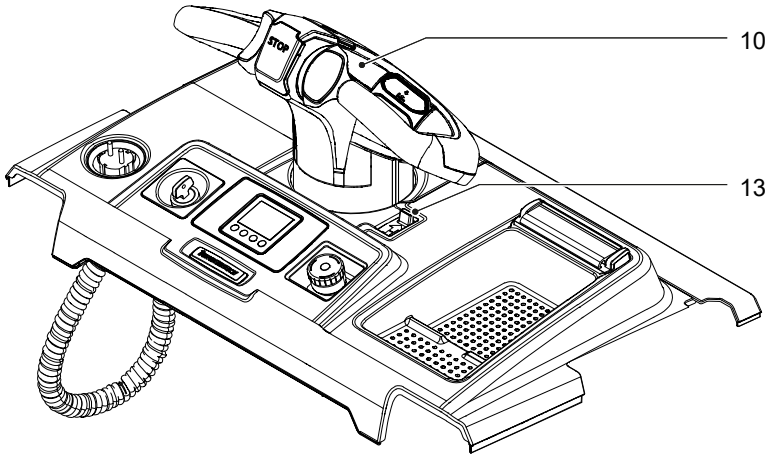

Tiller height adjustment allows the operator to adjust the height of the tiller to suit ergonomic requirements.

Adjusting the tiller height

- Hold the tiller (10) in place and unlock at the locking lever (13).
- Adjust the tiller to a comfortable operating height.
- Return the locking lever (13) to the locked position.

The tiller height is adjusted.

Depending on the design, it may only be possible to lock the locking lever in certain tiller height graduations. The tiller may need to be moved upwards or downwards slightly until the locking lever engages.

3.2.2 Operator platform with adjustable suspension

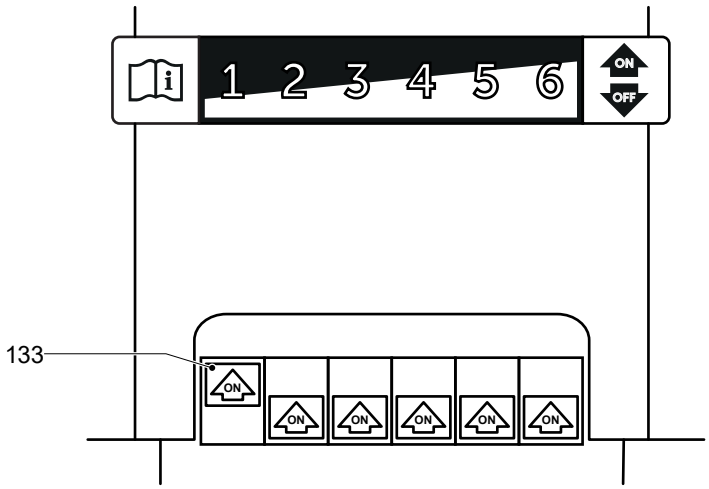

The stand-on platform has adjustable suspension to increase comfort while travelling on uneven travel lane surfaces. The human vibrations acting on the operator during travel are considerably reduced with the correct setting. Above the platform there are up to six gas pressure springs that can be applied via levers (133) to adapt to the operator's weight.

➔ Gas pressure springs 5 and 6 have twice the compression force.

Requirements

– Platform under no load.

Procedure

- Optionally you can apply up to six gas springs by moving the levers (133) up or push them away by moving the levers (133) down.

➔ Selecting too few gas pressure springs or insufficient suspension can cause the cushioned platform to touch the ground.

➔ Selecting too many gas pressure springs or an excessively hard suspension will mean that any human vibrations impacting on the operator during travel will not be reduced sufficiently.

The suspension of the stand-on platform is set.

Recommended settings for adjustable comfort platform

Operator weight	Number of gas springs applied	
	Recommendation	Range
52 kg	0	0
62 kg	0	0 to 1
75 kg	1	0 to 2
87 kg	2	1 to 3
100 kg	3	2 to 4
125 kg	4	3 to 5
150 kg	5	4 to 6

3.3 Preparing the truck for operation

⚠ WARNING!

Accidental truck movement can cause injury

Do not press the travel switch when entering or leaving the operator platform.

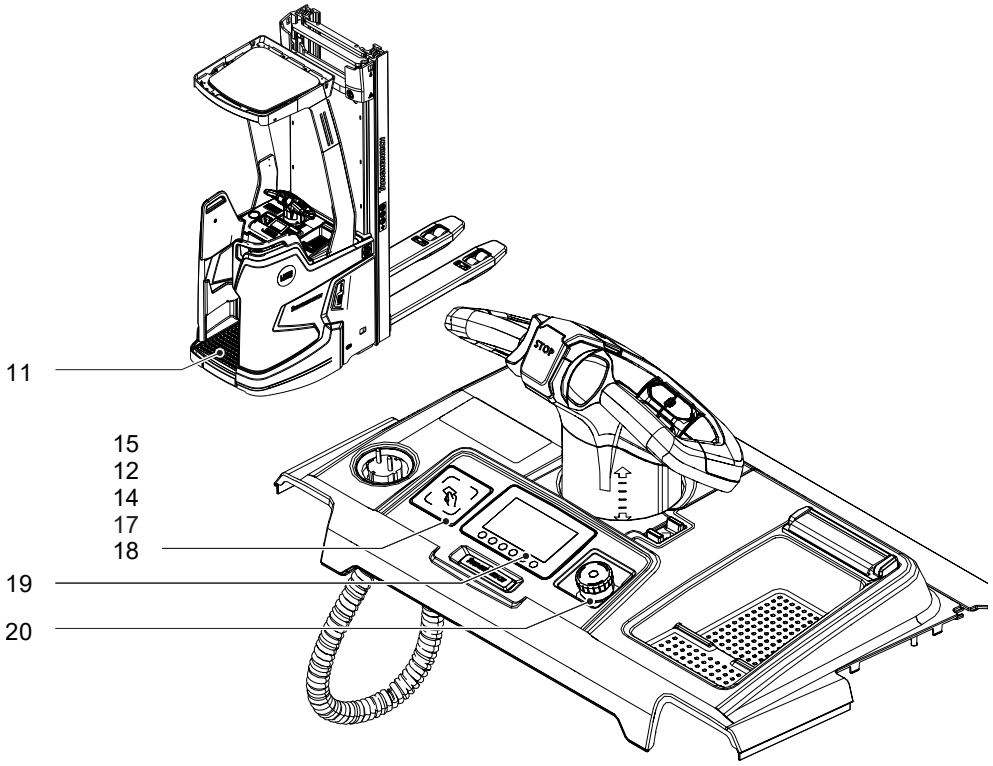

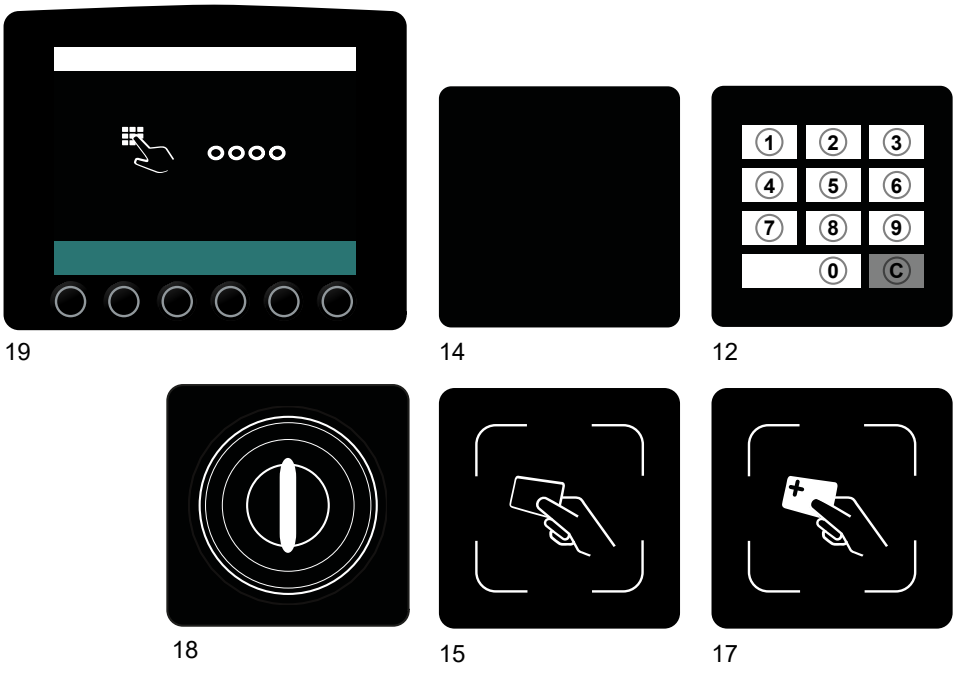

Trucks that are equipped with the optional fleet management system are released with a transponder. Further information on the transponders and on how to operate the fleet management system can be found in the relevant operating instructions.

➔ Operation of transponder reader Plus (17) corresponds to the operation of the standard transponder reader (15).

➔ When commissioning a truck equipped with a keypad or transponder reader, these features must be activated first, see page 182.

➔ If the industrial truck is equipped with the Pre-Op Check function (○), the associated checklist must first be processed before the truck is fully ready for operation. For further information on the Pre-Op Check, see the "Jungheinrich Fleet Management System" operating instructions.

Switching on the truck

Requirements

– Checks and operations before starting daily work completed, see page 119.

Procedure

- Step onto the stand-on platform (11).
- Unlock the emergency disconnect switch (20) – see page 134.
- Switch on the truck; to do this (depending on the truck equipment)
  - Insert the key into the key switch (18) and turn it as far to the right as it will go.
  - Enter the code using the display unit (19) or keypad (12).
  - Hold the transponder in front of the transponder reader (15).

Truck switched on and ready for operation.

3.4 Visual inspections and activities to be performed after establishing operational readiness

⚠ WARNING!

Risk of accident due to damage to or other defects in the truck and optional features

If damage or other truck or attachment (optional equipment) defects are discovered during the following checks, the truck must be taken out of service until it has been repaired.

▶ Report any defects immediately to your supervisor.

▶ Mark defective truck and take out of service.

▶ Do not return the industrial truck to service until you have identified and rectified the fault.

Requirements

– Checks and operations before starting daily work completed – see page 119.
– Truck switched on – see page 122.

Procedure

- Test warning indicators and safety equipment:
  - Test the Emergency Disconnect function by pressing the Emergency Disconnect switch. The main circuit is disconnected and no truck operations can be performed. Now unlock the emergency disconnect switch, see page 134.
  - Test the warning signal, see page 99.
  - Check the braking efficiency of all brakes, see page 142.
- Test the controls and displays and check for damage, see page 99.
- Test the steering – see page 140.
- Test the travel functionality, see page 136.

3.5 Parking the truck securely

⚠ WARNING!

An unsecured truck can cause accidents

Do not leave an unsecured truck.

- ▶ Park the truck securely when leaving it.
- ▶ Exception: If the operator remains in the immediate vicinity and leaves the truck only briefly, the engaged parking brake, see page 146, is adequate to secure the truck. Immediate vicinity is when the operator is able respond to malfunctions or attempts to use the truck by unauthorised persons immediately.

⚠ WARNING!

An unsecured truck can cause accidents

Do not park the truck on an incline. Do not park the truck without the brakes engaged. Do not park and leave the truck with the load handler raised.

- ▶ Park the truck on a level surface. In special cases the truck may need to be secured with wedges.
- ▶ Fully lower the load handler when leaving the truck.
- ▶ Select a place to park where no other people are at risk of injury from the lowered load handler.
- ▶ If the brakes are not working, place wedges underneath the wheels of the truck to prevent it from moving.

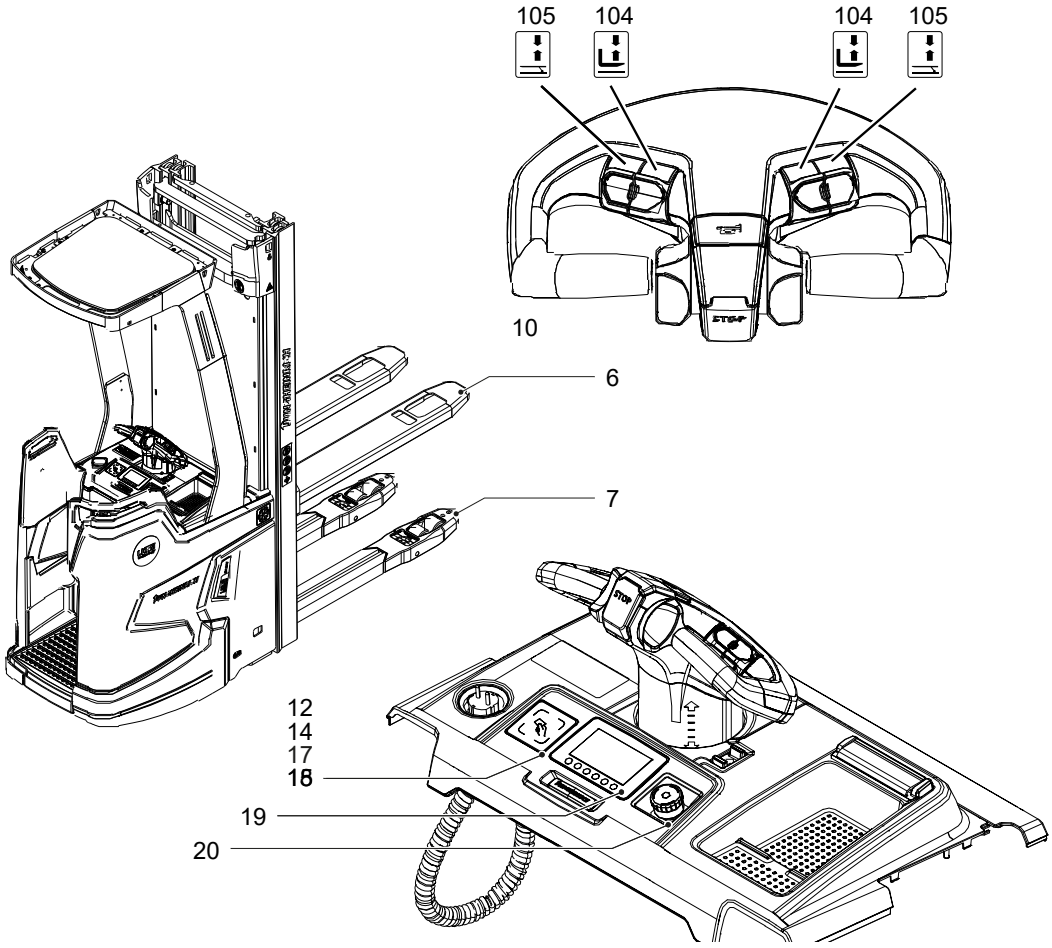

Parking the truck securely

Procedure

- Park the truck on a level surface.
- Fully lower the load fork (6).
  - Press the "Fork lift" button (104).
- ERC 214zi-216zi: Fully lower the support arms (7).
  - Press the "Support arm lift" button (105).
- Switch off the truck.
  - Trucks with key switch (18): Turn the key in the key switch anti-clockwise as far as it will go. Remove the key from the key switch.
  - Trucks with control panel (19): Switch off the truck with the function button – see page 99.
- Press the emergency disconnect switch (20).

The truck is parked.

4 Working with the truck

4.1 Safety regulations for travel mode

Travel paths and work areas

⚠ DANGER!

Do not exceed the permissible surface and spot load limits on the travel routes.
At blind spots get a second person to assist.
The driver must ensure that the loading ramp / dock cannot move or come loose during loading / unloading.

Only use lanes and routes specifically designated for traffic. Unauthorised third parties must stay away from work areas. Loads must only be stored in places specially designated for this purpose.
The truck must only be operated in work areas with sufficient lighting to avoid danger to personnel and materials. Additional equipment is necessary to operate the truck in areas of insufficient lighting.

Entry and exit

⚠ WARNING!

Risk of injury when entering or exiting during travel

Entering or exiting during travel can result in serious injury, e.g. colliding with the truck or stationary objects or getting caught on the truck.

- ▶ Only enter or exit a truck when it is stationary.
- ▶ Jumping from a moving truck is permitted only in an emergency.

Truck contour

⚠ WARNING!

Risk of trapping during travel

Serious injury to body parts caught between the moving truck and fixed objects in the travel area.

- ▶ Always remain within the truck contour during travel in ride-on mode. Do not lean out or reach out.
- ▶ Do not carry objects that protrude beyond the truck contour.

Place of set-down for loads

Loads must not be deposited on travel or escape routes, in front of safety mechanisms or operating equipment that must be accessible at all times.

Faults due to strong magnets

⚠ WARNING!

Electromagnetic influence can result in accidents

Strong magnets can cause electronic components such as Hall sensors to become damaged, resulting in accidents.

▶ Do not use magnets in the operating area of the truck. Exceptions to this rule are commercial, weak clamping magnets for attaching notices.

Type of loads to be carried

⚠ WARNING!

Risk of injury from falling loads

Low or small item loads moved above the mast protection pane or grille (○) and protruding over the load backrest can fall, endangering the operator and truck.

▶ Secure low or small item loads protruding over the load backrest, e.g. by wrapping them in film.

The operator must make sure that the load is in a satisfactory condition. Loads must always be positioned safely and carefully. Use suitable precautions to prevent parts of the load from tipping or falling down. Prevent liquid loads from sloshing out.

Travel conduct

The operator must adapt the travel speed to local conditions. The truck must be driven at slow speed when negotiating bends or narrow passageways, when passing through swing doors and at blind spots. The operator must always observe an adequate braking distance between the forklift truck and the vehicle in front and must be in control of the truck at all times. Abrupt stopping (except in emergencies), rapid U turns and overtaking at dangerous or blind spots are not permitted. Do not lean out or reach beyond the working and operating area.

Travel visibility

The operator must look in the direction of travel and must always have a clear view of the route ahead. If the truck is carrying loads that affect visibility, the truck must travel against the load direction. If this is not possible, a second person must walk alongside the truck as a lookout to observe the travel route while maintaining eye contact with the operator. Proceed only at walking pace and with particular care. Stop the truck as soon as you lose eye contact.

Keeping within the truck contour during travel

Hands and feet must remain within the area designated for the operator or on the operator platform. No part of the body may extend beyond the truck contour during travel.

Negotiating lifts, loading ramps and docks

Lifts may only be negotiated if they have sufficient capacity, are suitable for driving on and authorised for truck traffic by the owner. The driver must satisfy himself of the above before entering these areas. The truck must enter lifts with the load in front and must take up a position which does not allow it to come into contact with the

walls of the lift shaft. Persons riding in the lift with the forklift truck must only enter the lift after the truck has come to a rest and must leave the lift before the truck. The driver must ensure that the loading ramp / dock cannot move or come loose during loading / unloading.

4.1.1 Negotiate slopes and inclines

When negotiating slopes and inclines, observe the following:
- Negotiating slopes and inclines in accordance with the technical specifications is permissible only if they are marked as traffic lanes.
- Before negotiating slopes, ensure that the truck has sufficient gradeability – see page 48.
- The uphill and downhill slopes must be clean and non-slip and it must be possible to negotiate them safely in accordance with the truck's technical specifications.
- The travel direction must be selected in accordance with the following overview.
- The truck must not be turned, operated at an angle or parked on uphill and downhill slopes.
- Downhill slopes must only be negotiated at slow speed, with the driver ready to brake at any moment.
- In accordance with the German accident prevention regulations DGUV regulation 68 (as at August 2013), when travelling on slopes and inclines, the load must be guided uphill.
- When travelling on slopes and inclines unladen, the load handler must be guided downhill.
- Deviating national regulations must be given priority by the operating company.

➔ Raise the support arm lift slightly when driving on slopes and inclines, if necessary.

4.1.1.1 Load status

The travel direction that should be selected when driving on slopes and inclines depends on the current load status (transport travel or unladen travel).

4.1.1.2 Empty journey

Negotiating slopes and inclines when travelling empty

⚠ CAUTION!

Impaired travel stability

If heavy braking is initiated while descending a slope while empty, at high speed and with the load handler pointing towards the upslope, the stability of the truck may be impaired due to the high dynamic forces.

▶When travelling empty, the load handler must always face downhill – see figure.

▶Reduce the speed when travelling on slopes and inclines.

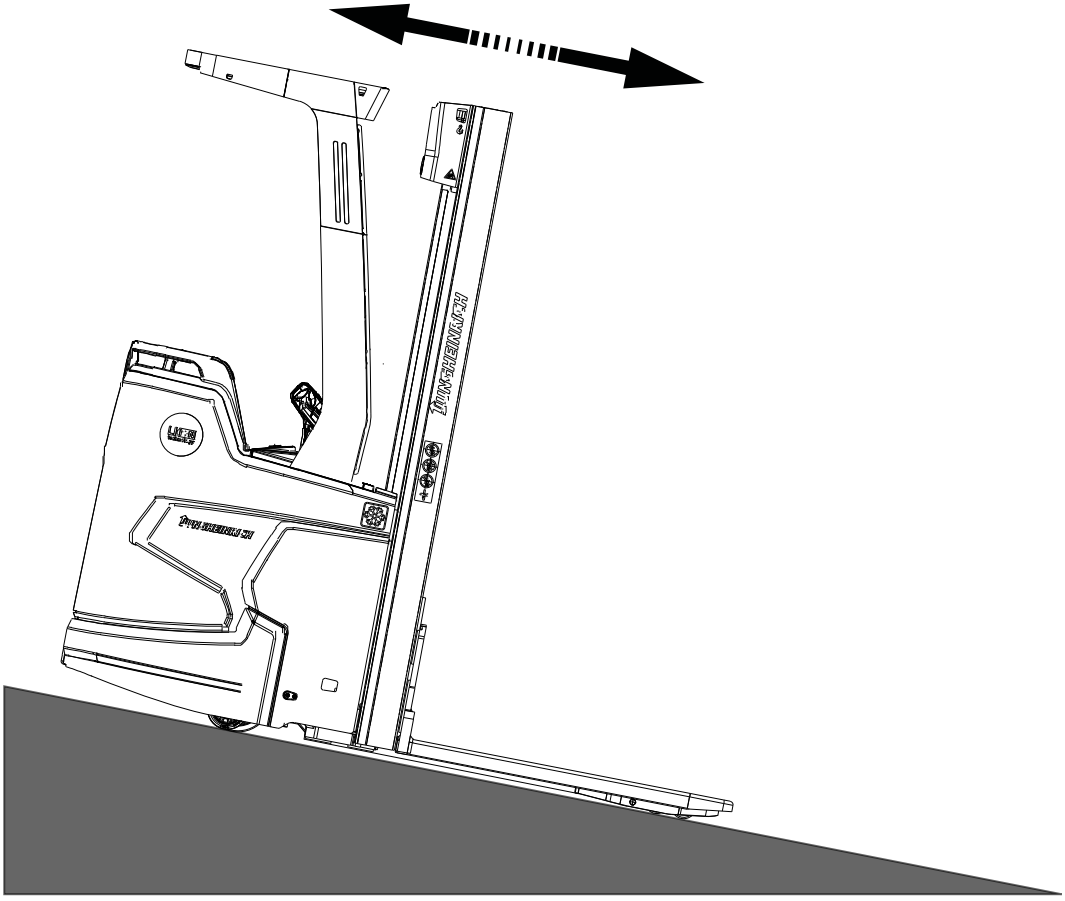

When travelling empty in ride-on mode, the load handler must face downhill, irrespective of the travel direction.

4.1.1.3 Transport run

Negotiating slopes and inclines while transporting a load

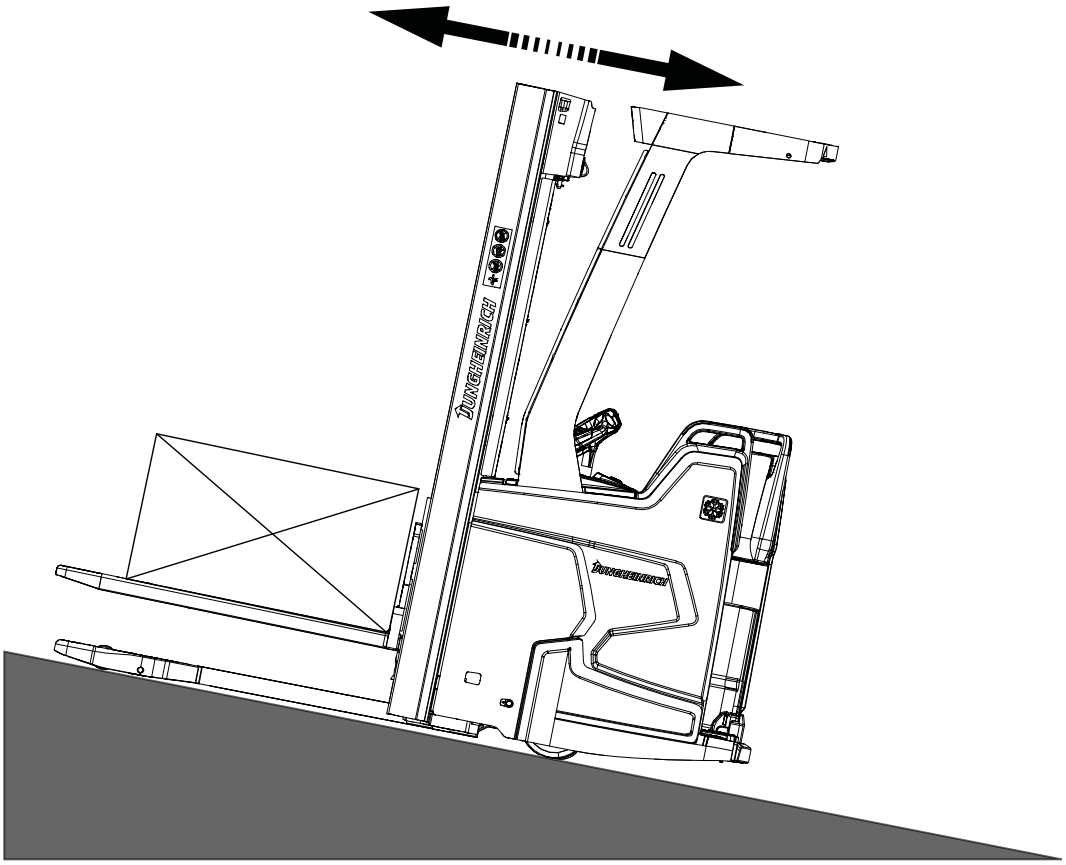

→ When travelling laden in ride-on mode, the load handler must be oriented towards the upslope, irrespective of the travel direction.

4.2 How to act in hazardous situations

⚠ WARNING!

Risk of injury from tipping or falling truck

If the truck tips or falls, there is a risk of severe crushing and impact injuries.

▶ Leave the truck immediately and move a safe distance away.

▶ Never attempt to a stop a truck that is tipping.

▶ Warn others in the danger area.

4.3 Operator platform

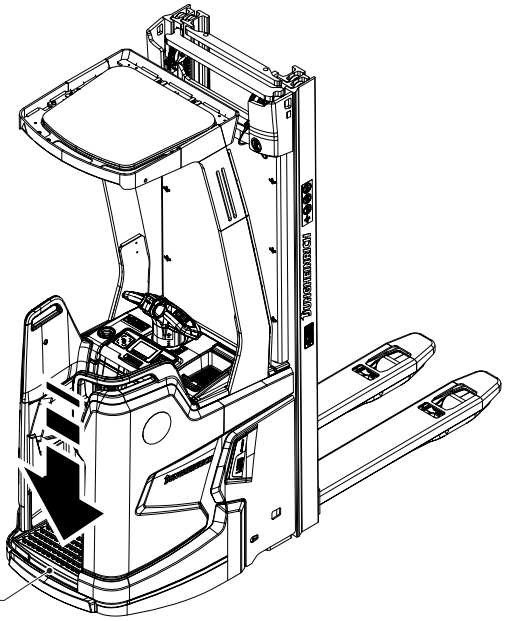

For ride-on mode, the stand-on platform (11) must be occupied before the travel switch is applied.

Monitoring function

The stand-on platform is monitored by the control unit and must be relieved by vacating it briefly after a maximum 60 minutes (default) when the truck is stationary.

If the set time is exceeded, the truck can be operated only at a maximum reduced speed of 2,5 km/h (slow travel).

4.4 Automatic braking

⚠ WARNING!

Risk of collision due to faulty operator platform

Operating the truck with a faulty operator platform can result in collisions with other people and objects.

- ▶ If the operator platform moves too slowly or not at all into the brake position if travel release is granted in spite of the brake position, the truck must be taken out of service until the cause of this fault has been rectified.
- ▶ Notify the manufacturer's customer service department.

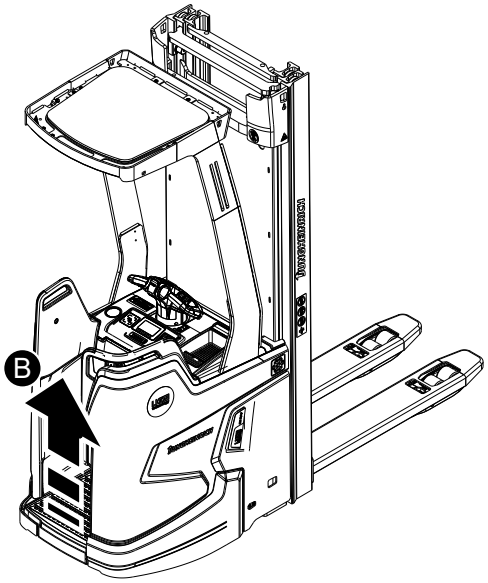

When the operator platform is relieved, it returns automatically to the brake position (B) and the brake is applied automatically.

4.5 Emergency Disconnect

⚠ CAUTION!

Applying maximum braking can result in accidents

Applying the Emergency Disconnect switch during travel will cause the truck to decelerate to a halt at maximum force. This may cause the load to slide off the load handler. There is a higher risk of accidents and injury.

▶ Do not use the Emergency Disconnect switch as a service brake.

▶ Use the Emergency Disconnect switch during travel only in emergencies.

⚠ CAUTION!

Faulty or non-accessible Emergency Disconnect switches can cause accidents

A faulty or non-accessible Emergency Disconnect switch can cause accidents. In dangerous situations the operator cannot bring the truck to a halt in time by applying the Emergency Disconnect switch.

▶ The operation of the Emergency Disconnect switch must not be affected by any objects placed in its way.

▶ Report any defects on the Emergency Disconnect switch immediately to your supervisor.

▶ Mark defective truck and take out of service.

▶ Do not return the industrial truck to service until you have identified and rectified the fault.

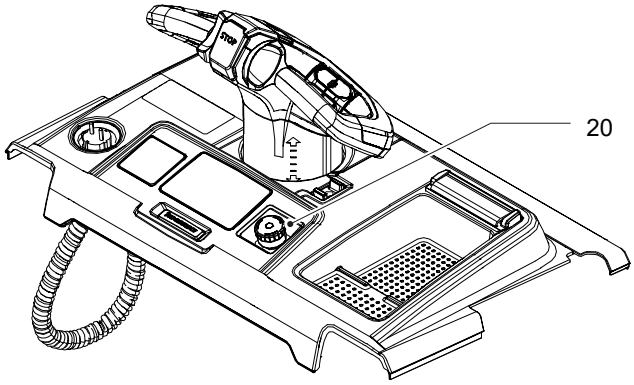

Operating the emergency disconnect switch

Procedure

- Press the emergency disconnect switch (20).

The industrial truck brakes to a halt and all electrical functions are deactivated.

➔ Increased wear of the drive wheel.

Unlocking the emergency disconnect switch

Procedure

- Turn the emergency disconnect switch (20) to unlock it.

All electrical functions are enabled and the truck is operational again (provided the truck was operational before the emergency disconnect switch was pressed).

4.6 Emergency stop

⚠ CAUTION!

Automatic braking can cause accidents

If the truck detects that signals which are required have not been received, or if it detects an error, the system reacts by triggering an emergency stop, either by braking the truck to a halt or until a valid signal status has been reached.

▶Remain at a suitable distance from the truck during operation.

▶In ride-on mode: Assume a stable standing position and hold on with both hands

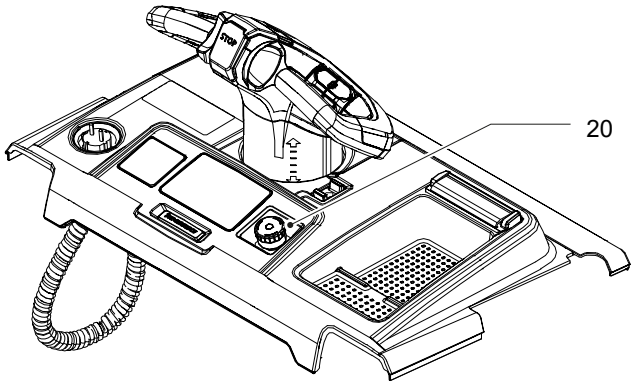

Emergency stop safety concept

If a fault is identified, the emergency stop automatically brakes the truck until it comes to a halt. Faults can be identified as part of the self-diagnostic after switch-on and also during truck operation.

An emergency stop is indicated by a symbol on the display unit.

Display symbols

Symbol	Meaning	Colour	Function
	Emergency stop	Red	Lights up in the case of automatic function deactivation due to truck malfunctions.

Resetting the emergency stop

Procedure

- Press the emergency disconnect switch (20).
- Unlock the emergency disconnect switch (20).

Emergency stop has been reset.

If the emergency stop continues to appear on the control and display unit following repeated reset attempts, contact the manufacturer's customer service department.

4.7 Travel

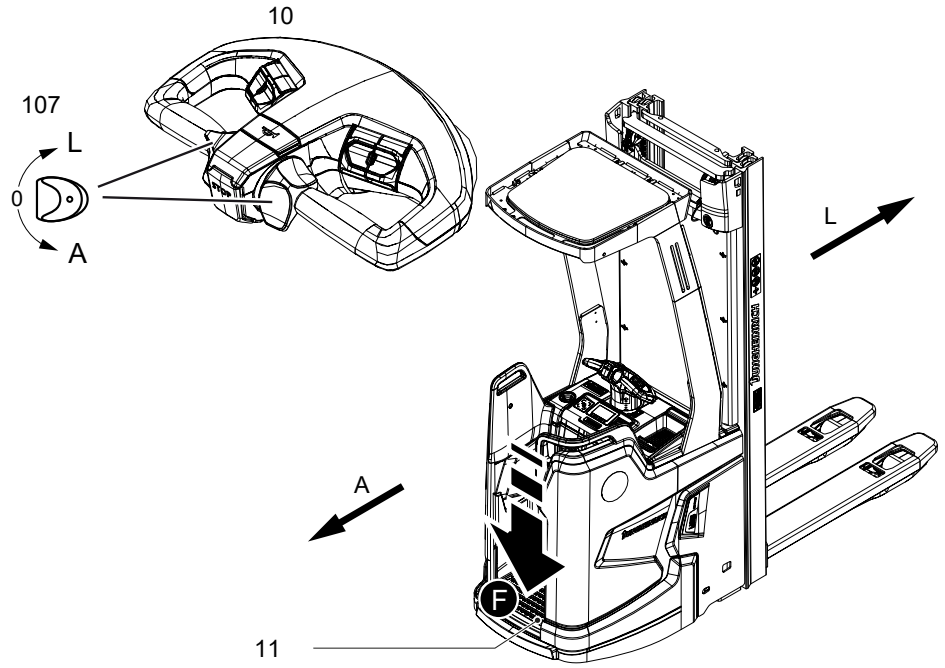

Requirements

– Commissioning carried out – see page 119.

Procedure

- Step onto the stand-on platform (11).
  The stand-on platform (11) moves downwards into the travel release area (F).
- Move the tiller (10) in the required travel direction.
- Move the travel switch (107) in the desired travel direction, i.e. load direction (L) or drive direction (A).
  The brake is released and the truck moves in the selected direction.
- Control the travel speed with the travel switch (107).

➔ When the travel switch is released, it automatically returns to the neutral position.

➔ The travel function is blocked when the operator platform is unoccupied. If the travel switch is actuated before the operator platform is occupied, the travel function is blocked and an error code appears on the display unit – see page 165.

➔ It is recommended that safety shoes be worn at all times when using the truck in rider mode to avoid injuries.

➔ Rolling back on an incline is detected by the truck's controller and the truck brakes to a halt.

Load-dependent curveCONTROL (●)

The curveCONTROL assistance system helps the operator to operate the truck safely. When cornering, the maximum travel speed is reduced according to the steer angle.

On this truck the assistant system operates on a load-dependent basis, i.e. when stipulating the maximum travel speed for corners, the current load weight is taken into account as well as the steer angle.

driveCONTROL (●)

The driveCONTROL assistance system automatically reduces the maximum travel speed and acceleration of the truck when the load fork is raised (from 2200 mm).

Automatic speed reduction (○)

On trucks with automatic speed reduction, travel with the load handler lowered is possible at reduced speed only. To be able to use the maximum speed, the operator must first raise the load handler slightly.

4.7.1 Changing the direction of travel

⚠ CAUTION!

Danger when changing direction during travel

Changing direction during travel causes the truck to decelerate sharply. When the truck changes direction, it can start travelling at high speed in the opposite direction unless the travel switch is released in time.

▶ After setting off in the opposite direction, apply the travel switch gently or not at all.
▶ Do not perform any sudden steering operations.
▶ Always face in the direction of travel.
▶ Maintain an adequate overview of the route you are travelling.

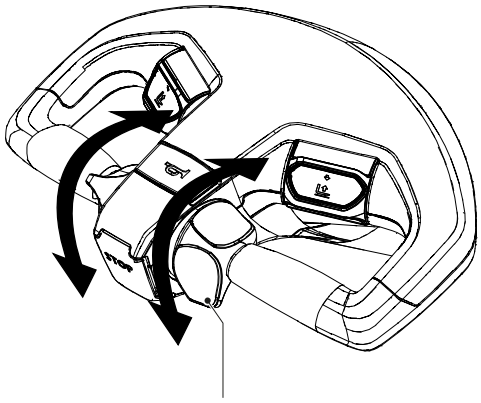

107

Changing direction during travel

Procedure

- Set the travel switch (107) to the opposite direction while travelling.

The truck decelerates until it starts to travel in the opposite direction.

4.7.2 Travelling while inching (○)

⚠ WARNING!

Risk of accident/injury in the hazardous area of the truck

The hazardous area is the area in which people can be endangered by the travel or lifting movements of the truck, its load handler or the load. This also includes areas which can be reached by falling loads or lowering operating equipment.

- ▶ Instruct unauthorised people to leave the hazardous area.
- ▶ Give a warning signal with plenty of time for people to leave.
- ▶ If unauthorised personnel are still within the hazardous area, stop the truck immediately.

⚠ CAUTION!

Trapping hazard from the truck during inching

When inching, the truck can pose a trapping hazard for the operator and other people.

- ▶ Wear personal protective equipment (e. g. safety shoes, ...).
- ▶ The truck must be operated with particular care and attention when inching.
- ▶ Ensure there are no other people standing between the truck and obstacles when inching.
- ▶ When inching, ensure that you are a sufficient distance from the truck.

Using touch mode

Touch mode must only be used for order-picking activities.

- Do not use touch mode to move loads.
- Do not use touch mode when loading and unloading.
- Do not use touch mode when stacking and retrieving.

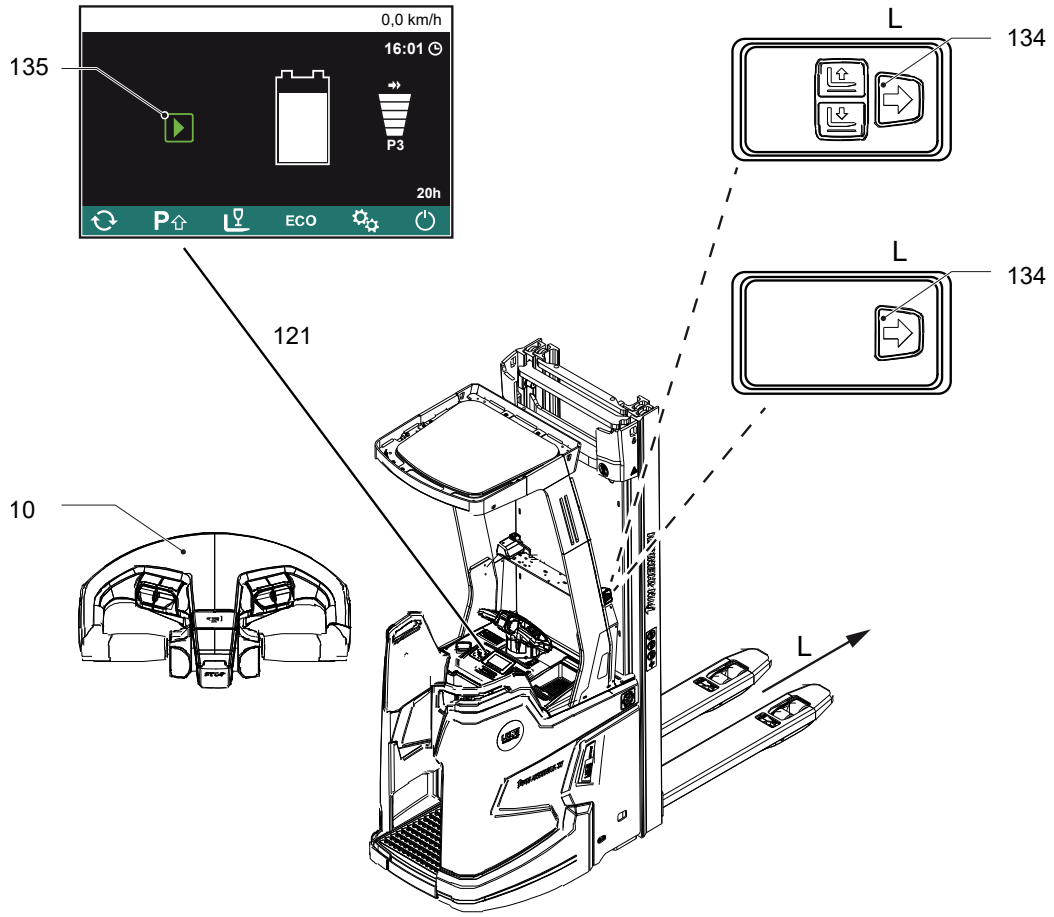

Requirements

– Support arm lift in upper or lower limit position.
– Tiller (10) in straight-ahead position (±15°).
– Green “Touch mode” symbol (135) shown on the display unit.

Procedure

• Walk alongside the truck.
• Press and hold the "travel in load direction" inching button (L) (134).

The brake is released and the truck moves in the load direction.

➔ Movement stops immediately when the inching button is released.

Driving characteristics

The maximum uninterrupted travel route is limited to 10 m by default. The manufacturer's customer service department can set this between 0 m and 10 m.

In touch mode, the maximum speed of the truck is limited. (The speed can be set by the manufacturer's customer service department to 4 km/h).

Control unit version

The touch-mode control unit version depends on the truck equipment.

4.8 Steering

⚠ WARNING!

Risk of accidents due to small turning circle

The rear of the truck swings out significantly when the steering is fully turned.

▶ Move off carefully and slowly with the tiller as far as it will go.

▶ Before moving off, ensure that no person or object is in the danger area of the truck.

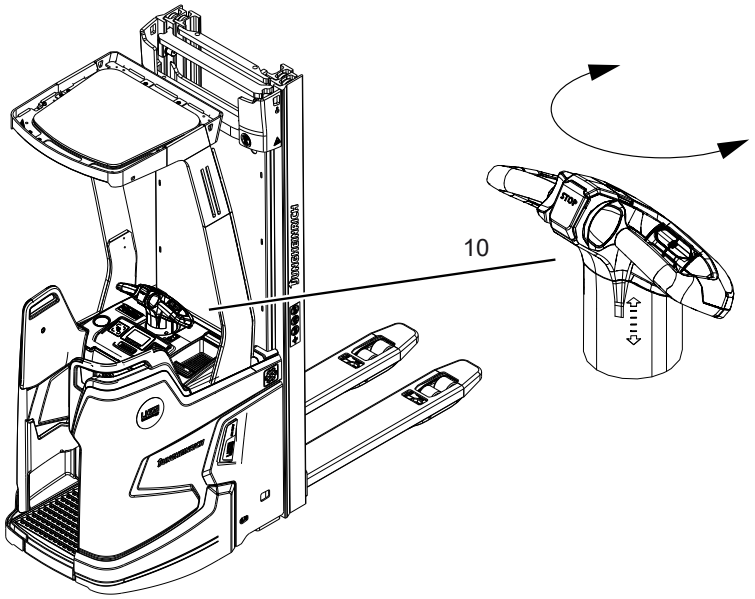

Procedure

- Swivel the tiller (10) to the left or right.

The truck is steered in the required direction.

When the tiller is released, it automatically returns to the centre position (straight-ahead travel).

Steering direction

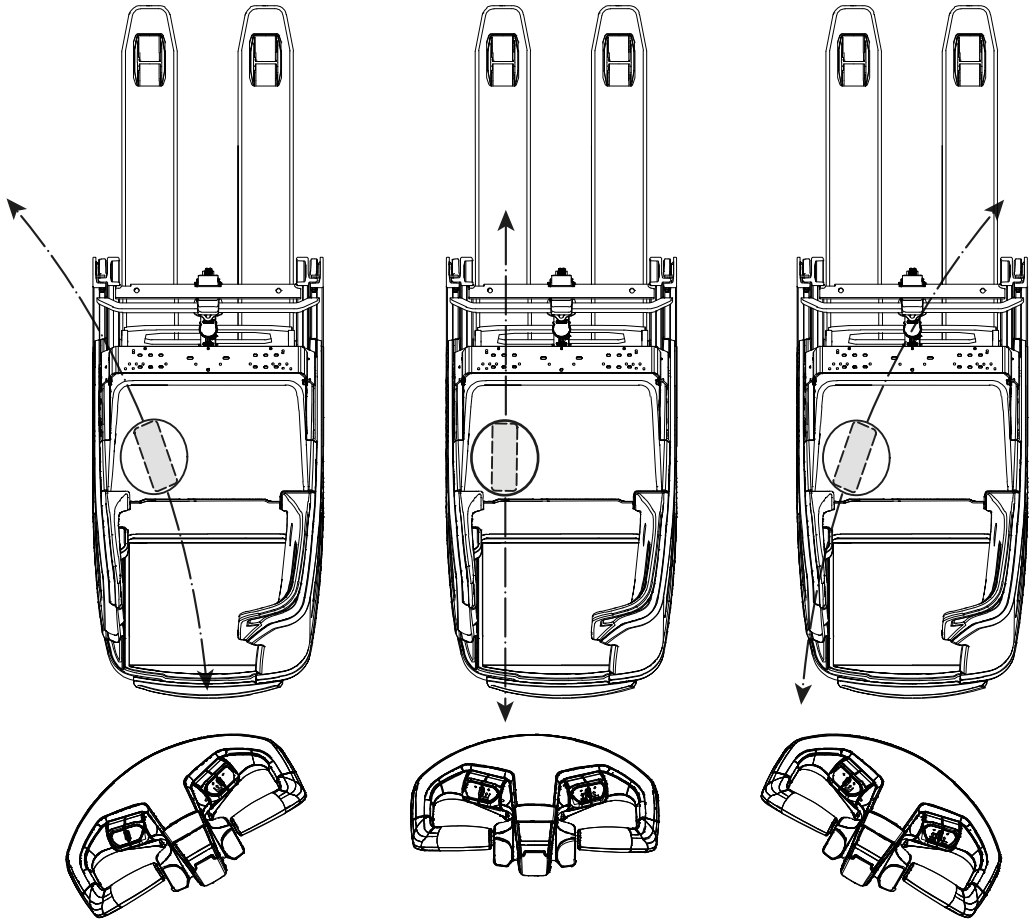

The steering direction of the truck corresponds to the direction of rotation of the tiller, as shown by the figure.

The curve radius is determined by the angle of rotation of the tiller.

4.9 Brakes

⚠ WARNING!

Accident risk

The brake pattern of the truck depends largely on the ground conditions.

▶ The operator must take into account the travel route conditions when braking.

▶ Brake with care to prevent the load from slipping.

▶ During normal operation the truck is to be braked only with the service brake.

⚠ WARNING!

Risk of collision due to faulty travel switch

Operating the truck with a faulty travel switch can result in collisions with other people and objects.

▶ If the travel switch returns to the neutral position too slowly or not at all when released, the truck must be taken out of service until the cause of this fault is identified and rectified.

⚠ CAUTION!

▶ In a hazardous situation, actuate the stop button to brake or press the emergency disconnect switch.

The truck can be braked in the following ways:

– Regeneratively using the service brake (stop button)
– Regeneratively using the coasting brake
– With the inversion brake (by reversing the travel direction via the travel switch)
– In emergencies: using the emergency disconnect switch – see page 134.

The stand-on platform no longer being under load and the actuation of the stop button lead to the same truck brake pattern.

4.9.1 Regenerative braking

⚠ WARNING!

Danger of accidents due to regenerative braking fault

Regenerative braking faults can result in extended stopping distances and accidents, particularly when travelling on inclines. Other persons can be injured in the truck's hazardous area.

- ▶ Keep all persons out of the hazardous area during travel operations.
- ▶ Instruct other people to move out of the hazardous area of the truck. Stop working with the truck if people do not leave the hazardous area.
- ▶ In emergencies, use the service brake for braking.

With regenerative braking types, electrical energy is fed back into the battery during the braking process. This increases the truck operating time.

If regenerative braking is used with the battery fully charged, there may be an excess of energy in the system. To prevent overcharging of the battery, the hydraulic unit is briefly activated in this case, without the load handler being raised.

Low temperature

If the lithium-ion battery is in the low-temperature range, the lift function may be impaired and regenerative braking with the coasting brake may not function correctly.

A symbol on the display unit warns the operator when the lithium-ion battery is in the low-temperature range – see page 105. An error message is also displayed – see page 165.

4.9.2 Braking with the coasting brake

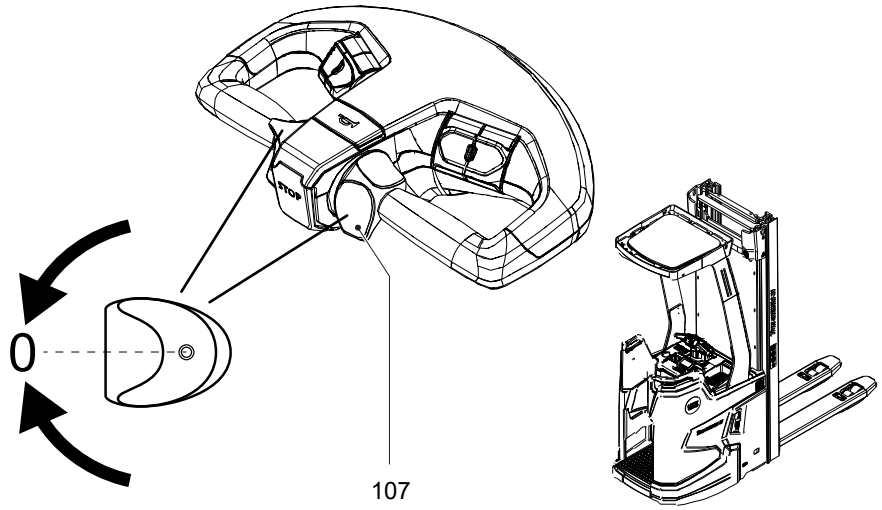

Procedure

- Release the travel switch (107) or manually move it to the zero position (0).

➔ When the travel switch is released, it automatically moves to the zero position.

The truck brakes to a halt regeneratively via the coasting brake.

4.9.3 Inversion braking

⚠ CAUTION!

Danger when changing direction during travel

Changing direction during travel causes the truck to decelerate sharply. When the truck changes direction, it can start travelling at high speed in the opposite direction unless the travel switch is released in time.

▶ After setting off in the opposite direction, apply the travel switch gently or not at all.

▶ Do not perform any sudden steering operations.

▶ Always face in the direction of travel.

▶ Maintain an adequate overview of the route you are travelling.

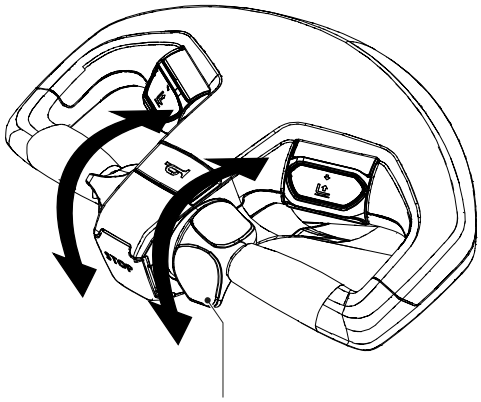

107

Procedure

- Set the travel switch (107) to the opposite travel direction during travel – see page 137.

The truck decelerates until it starts to travel in the opposite direction.

4.9.4 Braking with the Stop Button

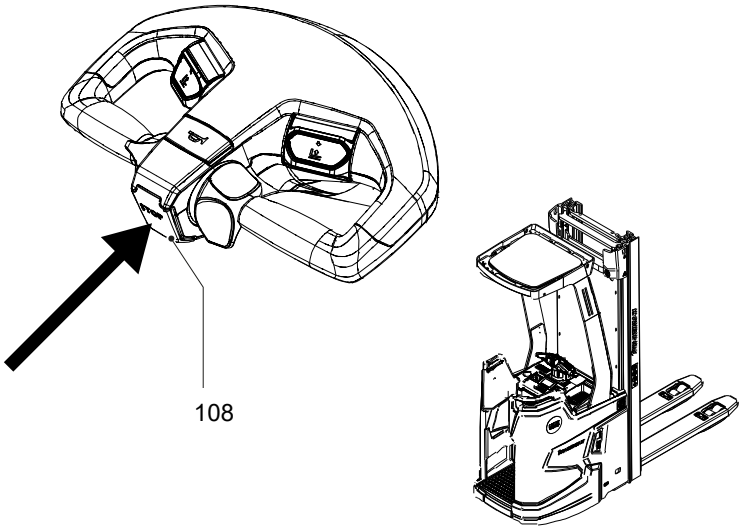

Procedure

- Press the stop button (108).

The truck brakes to a halt regeneratively via the service brake.

As an option, the truck can be configured so that braking occurs only while the button is being actuated.

4.9.5 Parking brake

Once the truck has stopped, the parking brake is automatically engaged. The parking brake is electrically released and actuated through spring pressure. The parking brake is designed to prevent unintended rolling away.

4.10 Raising or Lowering the Load Handler

⚠ WARNING!

Risk of accidents during lifting and lowering

People can be injured in the hazardous area of the truck.
The hazardous area is defined as the area in which people are at risk from movements of the truck including the load handler etc. This also includes areas which can be reached by falling loads, operating equipment etc.
Apart from the operator (in the normal operating position), no other people are permitted in the hazardous area of the truck.

- ▶ Instruct other people to move out of the hazardous area of the truck. Stop working with the truck if people do not leave the hazardous area.
- ▶ If people do not leave the hazardous area despite the warning, prevent the truck from being used by unauthorised people.
- ▶ Only carry loads that have been secured and positioned in accordance with regulations. Use suitable precautions to prevent parts of the load from tipping or falling off.
- ▶ Never exceed the maximum loads specified on the capacity chart.
- ▶ Never walk or stand underneath a raised load handler.
- ▶ Do not stand on the load handler.
- ▶ Do not lift other people on the load handler.
- ▶ Never reach or climb into moving truck parts.
- ▶ Do not climb onto parts of the building or other trucks.

NOTICE

Risk of material damage to the hydraulic unit

Once you have reached the mechanical limit position, release the button for raising the load handler. Otherwise, the hydraulic unit may suffer material damage.

Automatic lower sequence of support arm lift (○)

➔ ERC 214zi-216zi only

With the support arm lift raised, loads can be stacked and retrieved with the load fork up to a lift height of 2200 mm. For higher lift heights, the support arm lift must be lowered.

On trucks with the "automatic lower sequence of support arm lift" function (○), the support arms are automatically lowered as of a load fork lift height of 2200 mm when the "raise load fork" button remains depressed.

4.10.1 Raising or Lowering the Load Fork

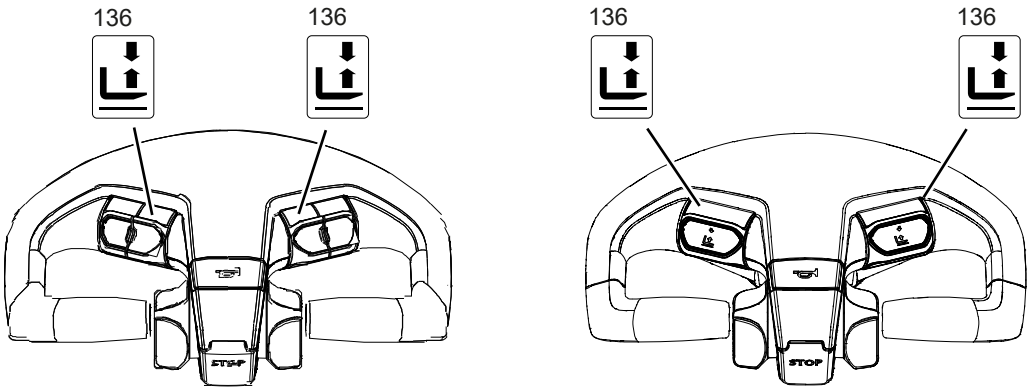

Requirements

– Truck ready for operation and switched on see page 122.
– Operator platform occupied.

Lowering the load fork

- Push the "fork lift" rotary button (104) in the "lower" direction until the desired lift height is achieved.

Load fork lowered.

Raising the load fork

- Push the "fork lift" button (104) in the "raise" direction until the desired lift height is achieved.

Load forks raised.

The lift/lowering speed can be infinitely controlled through the movement of the button.
Short stroke = slow lifting/lowering
Long stroke = quick lifting/lowering

Use as an elevated work table

The raised load handler can be used as an elevated work table when the truck is switched off, see page 164.

4.10.1.1 Raising or Lowering the Load Fork in Touch Mode (○)

⚠ WARNING!

Risk of accident/injury in the hazardous area of the truck

The hazardous area is the area in which people can be endangered by the travel or lifting movements of the truck, its load handler or the load. This also includes areas which can be reached by falling loads or lowering operating equipment.

- ▶ Instruct unauthorised people to leave the hazardous area.
- ▶ Give a warning signal with plenty of time for people to leave.
- ▶ If unauthorised personnel are still within the hazardous area, stop the truck immediately.

⚠ WARNING!

Risk of injury from falling loads

Falling loads can cause injuries.

- ▶ Never stand underneath a raised load handler.
- ▶ Never manually load or unload loads that could fall on the operator without additional safety devices at heights greater than 1800 mm.
- ▶ Always load loads so that they cannot fall off or accidentally shift.
- ▶ Secure low or small-item loads e.g. by wrapping them in film.
- ▶ Do not manually load or unload loads that are not correctly packed or have shifted as well as loads with damaged pallets or damaged stacking containers.

Lift height range in touch mode

Permissible lift height range of the load fork in touch mode: 400 mm - 1800 mm

If the load fork is outside this range, touch mode cannot be used.

Two-hand operation

To allow the two-hand operation to release the lifting or lowering function, the operating sequence outlined must be adhered to.

If a button is released, movement stops. If the button is pressed again within 5 seconds, the movement continues. In the event of a longer interruption, the operating sequence must be repeated.

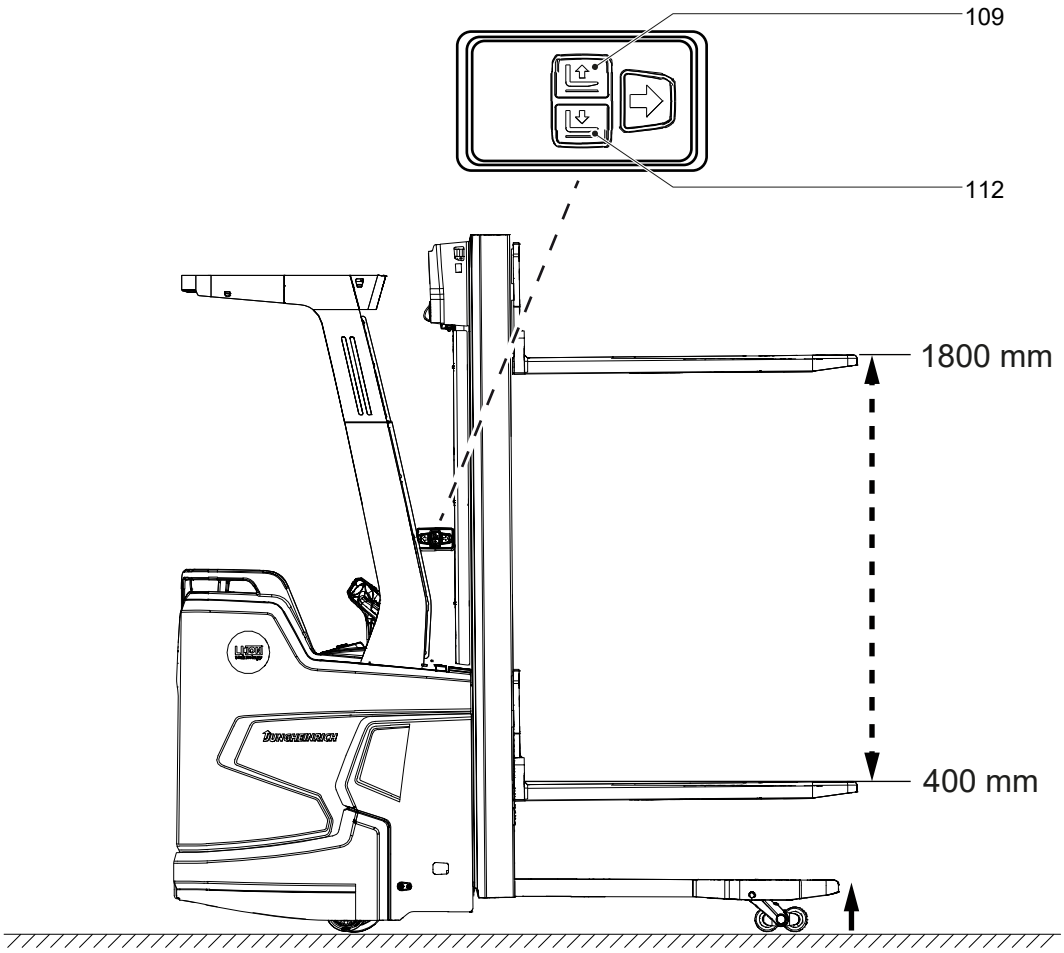

Procedure

Requirements

– Support arm lift fully raised or lowered.
– Load fork height: 400 mm - 1800 mm.

Procedure

- Walk alongside the truck.
- Press and hold the "lift" (109) or "lower" (112) inching button as required.
- Enable lifting or lowering using the tiller (two-hand operation).
  - Press and hold the lift or lower button on the tiller as required.

    The pressed touch mode button determines the load fork direction of movement. The lift or lower button for enabling on the tiller can be selected as required.

The load fork moves in the direction selected on the inching button.

Control unit version

The touch-mode control unit version depends on the truck equipment.

4.10.2 Raising or Lowering the Support Arms

Only ERC 214zi-216zi

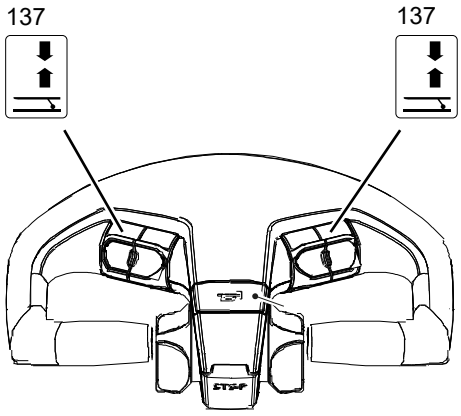

Requirements
– Truck ready for operation and switched on see page 122.
– Operator platform occupied.

Raising the support arms

- Push the "support arm lift" rotary button (105) in the "raise" direction until the desired lift height is achieved.

Support arms raised.

Lowering the support arms

- Push the "support arm lift" rotary button (105) in the "lower" direction until the desired lift height is achieved.

Support arms lowered.

4.11 Lifting, transporting and depositing loads

⚠ WARNING!

Risk of injury from falling loads

Low or small item loads moved above the mast protection pane or grille (○) and protruding over the load backrest can fall, endangering the operator and truck.

▶ Secure low or small item loads protruding over the load backrest, e.g. by wrapping them in film.

⚠ WARNING!

Unsecured and incorrectly positioned loads can cause accidents

Before lifting a load, the operator must make sure that it has been correctly palletised and does not exceed the truck's capacity.

▶ Instruct other people to move out of the hazardous area of the truck. Stop working with the truck if people do not leave the hazardous area.

▶ Only carry loads that have been correctly secured and positioned. Use suitable precautions to prevent parts of the load from tipping over or falling off the truck.

▶ Damaged loads must not be transported.

▶ Never exceed the maximum loads specified on the load diagram.

▶ Never stand underneath a raised load handler.

▶ Do not stand on the load handler.

▶ Do not lift other people on the load handler.

▶ Insert the load handler as far as possible underneath the load.

▶ Cornering should be avoided when stacking and retrieving due to the risk of tipover.

⚠ CAUTION!

▶ Do not lift long loads at an angle.

Observe the information and instructions on lifting and lowering the load handler – see page 147.

Maximum load length

The load to be picked up must not extend more than 50 mm beyond the load handler tips.

driveCONTROL (●)

The driveCONTROL assistance system automatically reduces the maximum travel speed and acceleration of the truck when the load fork is raised (from 2200 mm).

4.11.1 Load Centre

⚠ WARNING!

Risk of accident when the centre of gravity of the load is outside of the load centre distance

If the centre of gravity G of a raised load lies outside the load centre distance D specified for the load handler in the horizontal or vertical planes, under unfavourable conditions the raised load and also the truck can tip over while working.

- ▶ Observe load centre distances and capacities of the load handler, see page 66.
- ▶ Pick up the load so that its centre of gravity lies between the load arms of the load handler.
- ▶ Preferably, the load should be configured and picked up so that its centre distance lies within the load centre distance of the load handler ($d_1 \leq D$ and $d_2 \leq D$, see area DD in the illustration).
- ▶ A load with a centre of gravity outside of the load centre distance of the load handler ($d_1 > D$ and/or $d_2 > D$) should only be moved very carefully, as this load case has not been checked on a truck tested according to the test guideline.

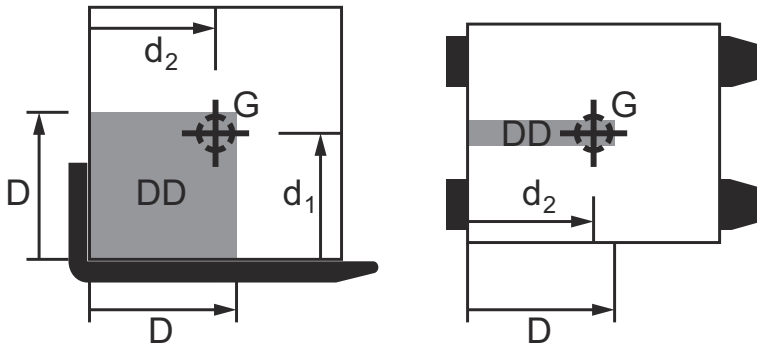

For loads with an even weight distribution, the load centre distance lies in the geometric centre of the volume.

For rectangular loads with an even weight distribution over the entire volume the load centre distance is in the middle, i.e. half the length, half the height and half the width of the load.

On trucks with positionCONTROL (○), the position of the load centre can be adjusted, see page 200.

4.11.2 Picking up loads with the load fork

⚠ CAUTION!

Danger when travelling with a raised load

Travelling with a raised load on the load fork – and no load on the support arms – impairs the driving characteristics of the truck and can cause it to tip over.

▶Travelling with a raised load on the load fork is permitted only when picking up and putting down a second load in double-deck mode.

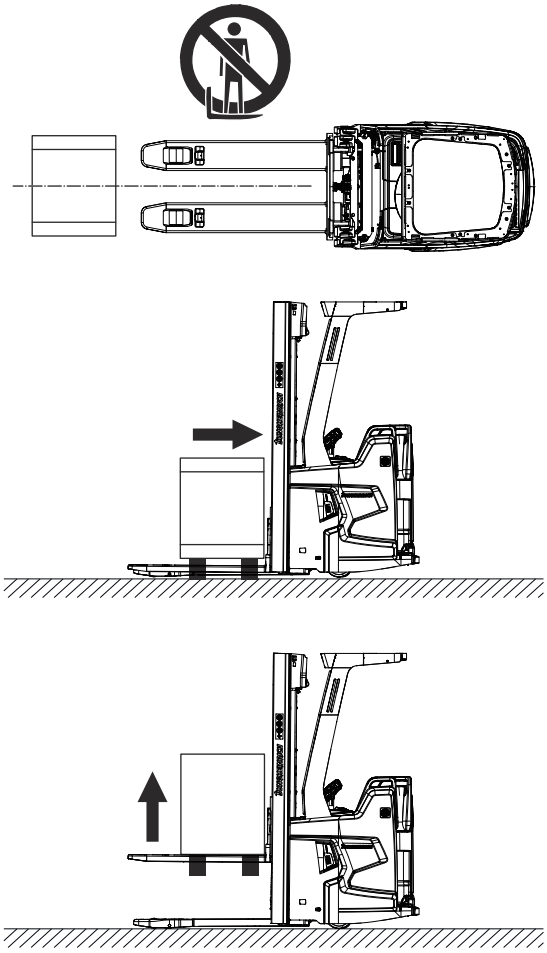

Requirements

– Load correctly palletised.
– Capacity of the truck is sufficient for the load – see page 66.
– Load handler evenly loaded for heavy loads.

Procedure

• Drive the truck slowly up to the pallet.
• Insert the load fork slowly into the pallet until the pallet is resting against the back.
• Raise the load fork until you reach the desired lift height – see page 148.

Load picked up.

4.11.3 Lifting loads with support arms

Only ERC 214zi-216zi

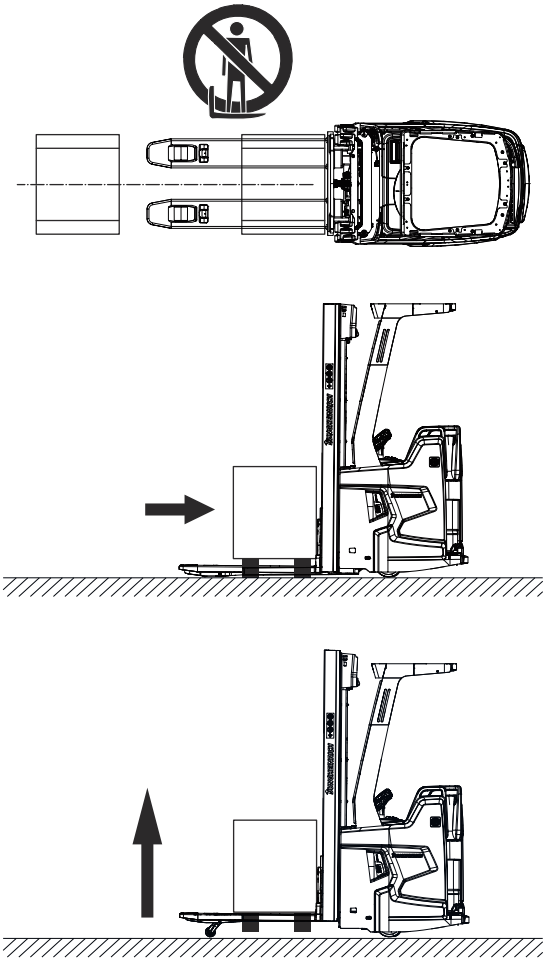

Requirements

– Load correctly palletised.
– Capacity of the truck is sufficient for the load – see page 66.
– Load handler evenly loaded for heavy loads.

Procedure

- Drive the truck slowly up to the pallet.
- Insert the support arms slowly into the pallet until the pallet is resting against the back.
- Raise the support arms until you reach the desired lift height – see page 151.

Load picked up.

4.11.4 Picking up the load with the double-decker function (○)

⚠ CAUTION!

Danger when travelling with a raised load

Travelling with a raised load on the load fork – and no load on the support arms – impairs the driving characteristics of the truck and can cause it to tip over.

▶ Travelling with a raised load on the load fork is permitted only when picking up and putting down a second load in double-deck mode.

⚠ CAUTION!

Risk to operational stability

In order not to jeopardize the operational stability, pay attention to the weight when transporting two pallets so that the truck does not tip over.

▶ In order not to jeopardize the operational stability, the heavier pallet should always be transported underneath.

➔ Only with ERC 214zi-216zi double-deck function (○)

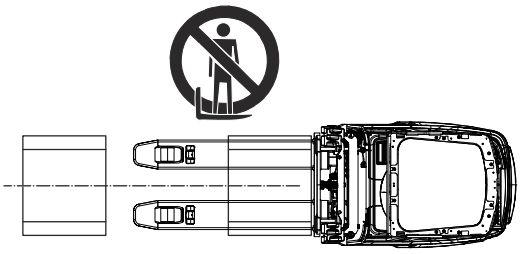

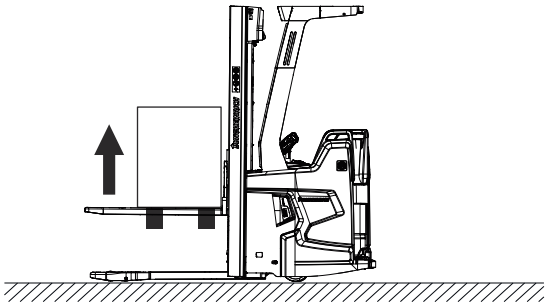

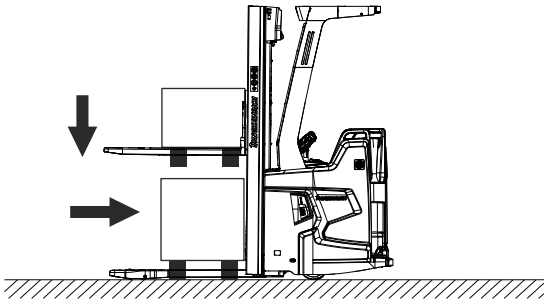

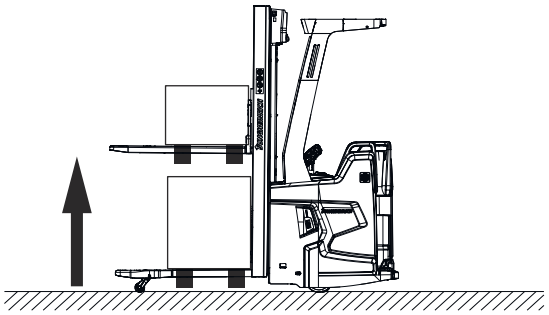

Requirements

– Load correctly palletised.
– The load weight does not exceed the truck's capacity – see page 71.
– Load handler evenly loaded for heavy loads.

Procedure

- Drive the truck slowly up to the pallet.
- Insert the load arms slowly into the first pallet until the pallet is resting against the back.
- Raise the load fork until the first pallet is higher than the second.
- Drive into the second pallet with the support arms.
- Raise the support arms.

Both pallets picked up.

➔ When transporting, the load fork with the upper load must be lowered as close as possible to the lower load without being deposited on the lower load.

➔ In double-deck operation, the load fork must not be raised higher than 1800 mm.

4.11.5 Transporting a load

⚠ WARNING!

Danger when travelling with a raised load

Travelling with a raised load on the load fork (>500 mm) impairs the driving characteristics of the truck and can cause it to tip over.

▶ Travelling with a raised load on the load fork is permitted only for stacking and retrieval.

▶ Travelling with a raised load on the load fork is permitted only when picking up or depositing a second load in double-deck operation.

Requirements

– Load raised correctly.
– Load fork lowered to transport height (approx. 150 - 500 mm above the ground).
– Perfect ground conditions.

Procedure

- Accelerate and decelerate with care.
- Adapt your travel speed to the conditions of the route and the load you are transporting.
- Travel at a constant speed.
- Be prepared to brake at all times.
  - Brake gently in normal circumstances.
  - Only stop abruptly in hazardous situations.
- Watch out for other traffic at crossings and passageways.
- You must use a lookout at blind spots.

Observe the information on travelling on slopes and inclines – see page 129.

4.11.5.1 Transporting a load with the double-deck function (○)

⚠ CAUTION!

Risk to operational stability

In order not to jeopardize the operational stability, pay attention to the weight when transporting two pallets so that the truck does not tip over.

▶ In order not to jeopardize the operational stability, the heavier pallet should always be transported underneath.

➔ Only with ERC 214zi-216zi double-deck function (○)

Requirements

– Load raised correctly – see page 157.
– Perfect ground conditions.

➔ When transporting, the load fork with the upper load must be lowered as close as possible to the lower load without being deposited on the lower load.

Procedure

- Accelerate and decelerate with care.
- Adapt your travel speed to the conditions of the route and the load you are transporting.
- Travel at a constant speed.
- Be prepared to brake at all times.
  - Brake gently in normal circumstances.
  - Only stop abruptly in hazardous situations.
- Watch out for other traffic at crossings and passageways.
- You must use a lookout at blind spots.

➔ Observe the information on travelling on slopes and inclines – see page 129.

4.11.6 Depositing a load

NOTICE

Avoid depositing the load suddenly to avoid damaging the load, load handler and the rack.

Place of set-down for loads

Loads must not be deposited on travel or escape routes, in front of safety mechanisms or operating equipment that must be accessible at all times.

Requirements

– Storage location suitable for storing the load.

Procedure

- Drive carefully up to the storage location.
- Lower the load handler.

➔ To avoid damaging the load and the load handler, avoid setting the load down abruptly.

- Lower the load handler so that the load handler is clear of the load (see page 147).
- Carefully remove the load handler from the pallet.

The load is deposited.

Soft landing (○)

The "soft landing" feature reduces the lowering speed of the load just before it reaches the ground (approx. 100 - 300 mm).

Slow travel with forks lowered (○)

On trucks with the "slow travel with forks lowered" function, the travel speed is automatically reduced while the forks are lowered in order to reduce wear on the skids.

4.11.6.1 Depositing a Load with the Double-Deck Function (○)

⚠ WARNING!

Danger when travelling with a raised load

Travelling with a raised load on the load fork (>500 mm) impairs the driving characteristics of the truck and can cause it to tip over.

▶ Travelling with a raised load on the load fork is permitted only for stacking and retrieval.

▶ Travelling with a raised load on the load fork is permitted only when picking up or depositing a second load in double-deck operation.

➔ Only with ERC 214zi-216zi double-deck function (○)

Requirements

– Storage location suitable for storing the load.

Procedure

- Drive the truck carefully up to the first storage location.
- Lower the support arms until the load is set down.
- Carefully move the support arms out of the pallet.
- Lower the support arms.
- Lower the load fork to transport height (150 - 500 mm).
- Drive the truck carefully up to the second storage location.
- Lower the load fork so that it is clear of the load.
- Carefully withdraw the load fork from the pallet.
- Lower the load fork.

Both loads have been set down.

4.11.7 Stacking or unstacking the load

⚠ WARNING!

Increased risk of accidents during stacking and retrieving

When stacking and retrieving, the truck is moved with the load raised, which increases the risk of tipover. There is also a risk that parts could fall off.

▶ Adopt an appropriate, slow speed when stacking and retrieving.

▶ Avoid cornering when stacking and retrieving.

▶ Keep a sufficient distance between the load handler, load and storage equipment.

▶ Before driving away, ensure that the load is securely in the rack.

NOTICE

Adapt a slower speed when stacking and retrieving.

Requirements

– Load picked up correctly – see page 152.

Procedure

- Raise the load to the required height.
- Store the load.

4.12 Use as a Lift Work Table

⚠ WARNING!

A raised load handler can cause accidents

A stationary truck with a raised load handler is potentially hazardous in work areas.

▶ Prevent any risk to personnel and materials.

▶ Never load or discharge loads manually with a raised load handler in areas that are hazardous, with limited visibility or insufficient lighting.

▶ Park the truck securely when leaving it, see page 125.

⚠ WARNING!

Risk of injury from falling loads

Falling loads can cause injuries.

▶ Never stand underneath a raised load handler.

▶ Never manually load or unload loads that could fall on the operator without additional safety devices at heights greater than 1800 mm.

▶ Always load loads so that they cannot fall off or accidentally shift.

▶ Secure low or small-item loads e.g. by wrapping them in film.

▶ Do not manually load or unload loads that are not correctly packed or have shifted as well as loads with damaged pallets or damaged stacking containers.

⚠ CAUTION!

Risk of accident when the raised load handler slowly lowers of its own accord

The raised load handler can lower independently due to internal leakage. According to EN ISO 3691-1 the load handler may lower by up to 100 mm during the first 10 minutes at the rated capacity with the hydraulic oil at normal operating temperature.

▶ Never stand underneath a raised load handler.

Presence of the operator

The load handler can remain in a raised position to be used as a lift work table when the truck is switched off, provided the operator is close to the truck.

Immediate vicinity of the truck is when the operator is able to respond to malfunctions or attempts to use the truck by unauthorised persons immediately.

Observe national regulations and local operating conditions.

Use as an elevated work table

Requirements

– Storage location suitable for manual loading or unloading of loads.

Procedure

- Drive carefully up to the storage location.
- Actuate the "fork lift" rotary button (104) in the "raise" direction until the desired lift height is achieved.
- Switch off the truck.

Loads can be loaded or unloaded manually with the load fork raised.

5 Troubleshooting

This chapter allows operators to identify and rectify simple faults or the results of incorrect operation themselves. When trying to locate a fault, proceed in the order shown in the remedy table.

➔ If, after carrying out the following remedial action, the industrial truck cannot be restored to operation or if a fault in the electronics system is displayed with a corresponding error message, contact the manufacturer's customer service department.
Subsequent troubleshooting must only be performed by the manufacturer's customer service department. The manufacturer has a customer service department specially trained for these tasks.
In order for customer services to react quickly and specifically to the fault, the following information is essential:
- Truck serial number
- Event message on the display unit (if present)
- Error description
- Current location of truck.

5.1 Truck in General

5.1.1 Truck does not start

Event message	Possible cause	Actions
-	Emergency disconnect switch pressed	– Unlock the emergency disconnect switch – see page 134
-	Truck switched off at key switch	– Switch on truck at key switch, see page 102
-	Battery charge too low	– Check the battery charge and charge battery, if necessary, see page 88
-	Faulty fuse	– Check fuses, see page 229
E-1901	Travel switch not in home position when truck switched on	– Do not operate the travel switch
E-1908	The operating sequence has not been observed	– Step onto the platform. – Actuate the travel switch and move the tiller into the working position if necessary.
E-2951	"Support arm lift" button / "fork lift" button not in home position when truck switched on	– Do not operate the button when switching on the truck

5.1.2 Truck operates only in slow travel in rider mode

Event message	Possible cause	Actions
E-0943.1	The operator platform was not vacated in time (default: 60 minutes)	– Briefly vacate the operator platform when the truck is stationary – see page 132
-	Light barrier of the foot protection (○) is interrupted.	Remove the foot or obstacle from the light barrier. The yellow flashing "stand-on platform presence switch" icon goes out – see page 106.
E-2124.21 or E-2124.22	During the set time, the control unit has not received any valid signals from the KoStaS sensor in the mast (default 5 hours).	With the industrial truck stationary, raise the mast to a load-fork lift height of more than 2200 mm. The yellow flashing "lift limit reached" icon goes out – see page 106.

5.1.3 Load cannot be lifted

Event message	Possible cause	Action
-	Truck not operational	– Carry out all measures listed under “Truck does not start”
-	Hydraulic oil level too low	– Check the hydraulic oil level, see page 225
-	Battery charge too low	– Check the battery charge and charge battery, if necessary, see page 88
-	Faulty fuse	– Check fuses, see page 229
-	Excessive load	– Note maximum capacity, see page 65
E-1901	Travel switch not in home position when truck switched on	– Do not operate the travel switch
E-1908	The operating sequence has not been observed	– Step onto platform – Actuate the travel switch and move the tiller into the travel range if necessary – see page 136
E-1914	Collision safety switch pressed when truck switched on	– Do not press collision safety switch
E-2951	Button for lifting or lowering a load handler when switching on a truck not in the home position	– Do not press the button – see page 103
E-2124	Switch in mast implausible	– Lowering and travelling possible up to 1.5 km/h – Park the truck securely, see page 125 – Contact the manufacturer's customer service department

5.2 Battery

If any faults are found in the battery or the Jungheinrich battery charger, contact the manufacturer's customer service department immediately. The operating company must not carry out any actions on its own. Independent attempts to tamper with or repair the battery may invalidate the warranty. A service agreement with Jungheinrich will help identify faults before they lead to problems.

Safety regulations for handling lithium-ion batteries – see page 80.

5.2.1 Restricted use (slow travel, lift cut-off, no travel) of the truck

Event message	Possible cause	Actions
E-5195.x	Error in a strand The lithium-ion battery can still be used, but with reduced capacity	– Charge the lithium-ion battery, see page 88 – If the problem persists, contact the manufacturer's customer service department

5.2.2 Truck can no longer be switched on

Event message	Possible cause	Actions
-	The lithium-ion battery has switched to energy-saving mode to protect against deep discharge	– Charge the battery, see page 88 – If the problem persists, contact the manufacturer's customer service department
E-5409.1	Overtemperature or fault of the lithium-ion battery Before the lithium-ion battery is shut down, corresponding warnings appear on the truck	– Bring the lithium-ion battery within the permissible application range, see page 84 – Charge the battery, see page 88 – If the problem persists, contact the manufacturer's customer service department
E-5413.2	Low temperature or fault of the lithium-ion battery Before the lithium-ion battery is shut down, corresponding warnings appear on the truck	– Bring the lithium-ion battery within the permissible application range, see page 84 – Charge the battery, see page 88 – If the problem persists, contact the manufacturer's customer service department
E-5344.1 E-5342.1	Low voltage or fault of the lithium-ion battery Before the lithium-ion battery is shut down, corresponding warnings appear on the truck	– Charge the battery, see page 88 – If the problem persists, contact the manufacturer's customer service department

6 Load handler emergency lowering

⚠ WARNING!

Lowering the mast can result in injuries

- ▶ Instruct other people to move out of the hazardous area of the truck during emergency lowering.
- ▶ Never stand underneath a raised load handler.
- ▶ If a second person is used to lower the load handler via the emergency lowering device, this person must consult with the operator. Both people must be in a safe area to avoid danger.
- ▶ Emergency lowering is prohibited when the load handler is in the rack.
- ▶ Report any defects immediately to your supervisor.
- ▶ Mark defective truck and take out of service.
- ▶ Do not return the industrial truck to service until you have identified and rectified the fault.

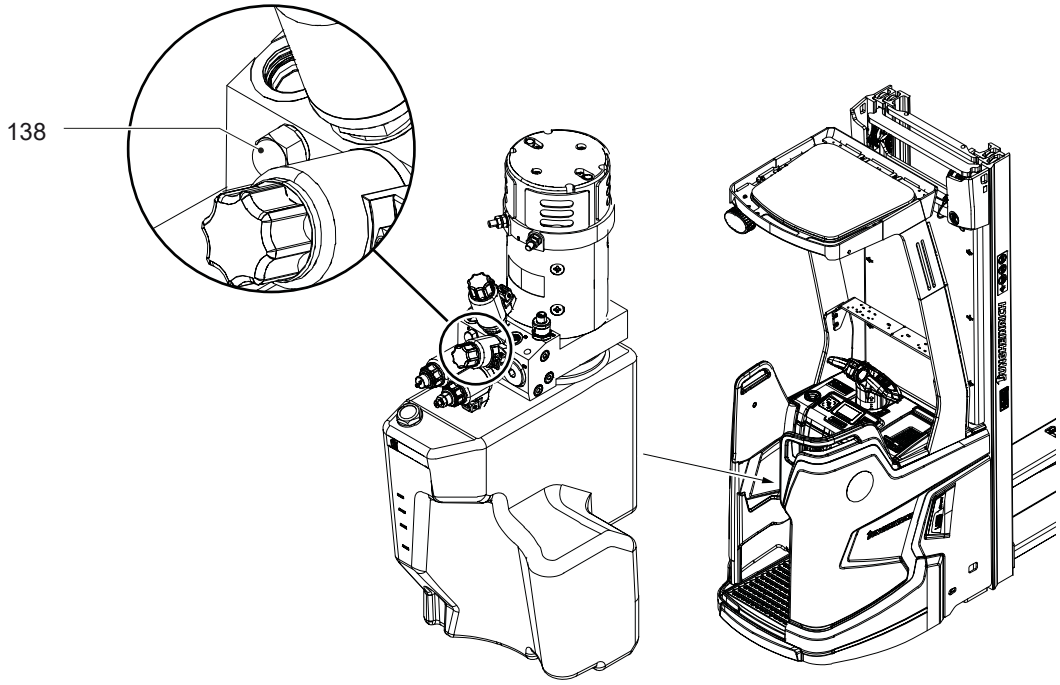

Emergency lowering of the load handler

Procedure

- Switch off the truck.
- Actuate the emergency disconnect switch, see page 134.
- Remove the front panel, see page 222.
- Carry out emergency lowering at the mast lift valve.
  - Slowly open the hex bolt (138) to gradually lower the load handler.

The load handler is lowered.

➔ *After successful emergency lowering, tighten the hex bolt hand tight.*

7 Moving a truck without its own drive system

7.1 Drive Wheel Brake Assembly and Disassembly

⚠ WARNING!

Risk of accidents due to uncontrolled movements of the truck

No braking effect exists when the brake is released. If the truck is positioned on an incline, it may move when the brake is disengaged.

▶ Park the truck on a level surface before releasing the brake.

▶ Use suitable means, e.g. wheel chocks, to prevent accidental movement of the truck.

▶ Do not park the truck without a fully assembled brake.

▶ Fully reassemble the brake at the destination.

▶ Return the truck to service only when you have identified and rectified the fault.

The truck can be moved without its own drive system only when the drive wheel brake is disassembled.

The brake may be disassembled and assembled only by authorised service personnel.

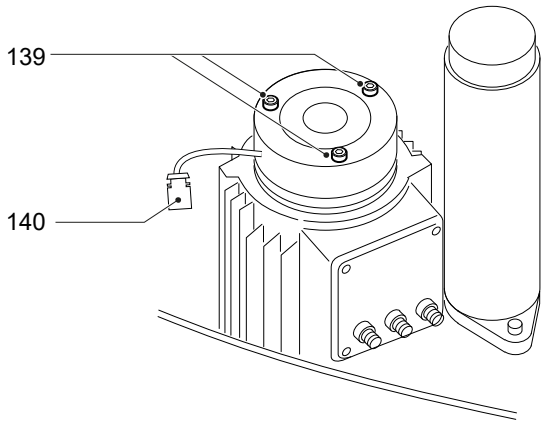

Disassembling the brake

Tools and Material Required

– Three M5 x 50 screws
– Spanner

Procedure

- Switch off the truck.
- Press the emergency disconnect switch.
- Remove the front panel.
- Use chocks (for example) to prevent the truck from moving.
- Disconnect the electrical plug connection (140) of the brake.
- Loosen the three screws (139) on the brake until the brake is in a relieved state on the motor.
- Remove the chocks.

The truck can be moved.

Assembling the brake

Procedure

- Prevent the truck from moving, e.g. by placing wedges underneath.
- Place the brake on the motor shaft.

➔ Ensure the correct alignment of the assembly bores and the connector plug.

Screw three M5 x 50 screws (139) into the brake and tighten.

➔ Torque: 10 Nm.

- Connect the electrical plug connection (140) for the brake.
- Fit the front panel, see page 222.

Braking is now restored. The brake can now be applied without current.

8 Optional Equipment

8.1 Display unit with 6-inch display

The optional display unit with 6-inch display serves as an additional display for the assistance systems and simplifies control of the assistance and basic functions of the truck.

The indicator lamps that appear on the display unit are dependent on the truck equipment.

The operating concept and layout correspond to the standard display unit – see page 105.

8.1.1 Typical Example

This display appears when the truck is equipped with the optional operationCONTROL and positionCONTROL assistance systems.

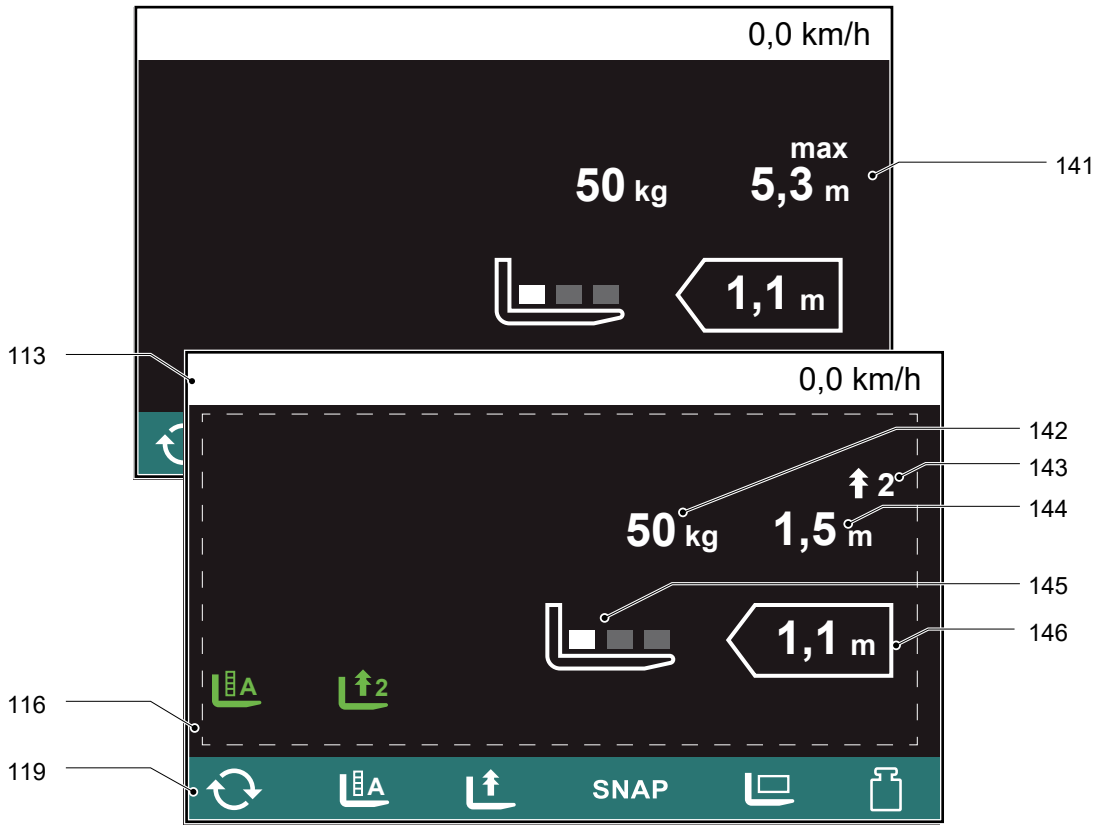

Item	Display or control element	Function
113	Information field	Displays event messages and optional information such as speed – see page 106.
116	Area for display symbols	Area for information concerning operation of the truck. The symbols shown depend on the operating situation and the truck status – see page 106.
119	Function symbols	The functions shown as function symbols are operated using the function key located underneath, see page 111.
141	Remaining lift height	Shows the lift height to which the current load may be raised according to the capacity plate, see page 61.
142	Current load weight	Shows the weight of the raised load.
143	Rack height select (storage slot)	Shows the currently selected lift height storage slot.
144	Currently selected lift height	Shows the height to which the active rack height select is assigned.
145	Load centre pre-selection	Indicates the area of the load handler in which the load centre is currently set.
146	Current load height	Shows the current height of the load.

➔ The storage slot preselection (143) and assigned lift height (144) are displayed only when a lift height has been selected. If no lift height has been selected, the remaining lift height (141) is displayed.

8.1.2 Overload Display (○)

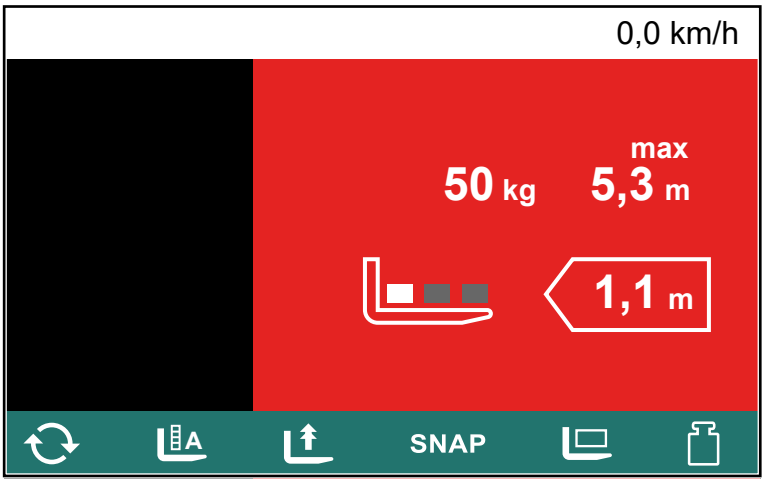

The operator is informed as follows shortly before a load leaves the permissible area according to the load chart:

– The display area of the control unit is highlighted red (see figure).
– The buzzer sounds, see page 177.
– The vibration signal of the tiller (○) is triggered.

In this case, the load is raised slowly and stops fully before leaving the permissible area.

8.1.3 Transmitter

The display unit with 6-inch display features a transmitter that informs the operator of the following:
- operationCONTROL (○): Approaching the remaining lift height
- SNAP function (○): Stopping of the load handler at a saved height.

➔ The transmitter can be muted. A corresponding symbol then appears on the display unit.

Display symbols

Symbol	Meaning	Colour	Function
	Mute	Yellow	Illuminates when the transmitter (○) is muted. No warnings or signals are sounded.

Function button assignment

Symbol	Meaning	Function button
	Transmitter	Mutes the transmitter or restores sound.

8.2 Floor-Spot (O)

⚠ CAUTION!

Risk of retinal damage due to blue light from blue Floor-Spot

In accordance with IEC 62471, the blue floor spot is classified as risk group 2:

Medium risk. Blue light can potentially damage the retina within a range of 400 nm to 780 nm.

- ▶ Check that the warning notice: "Caution! Potentially dangerous optical radiation" is present and legible, and replace if necessary, see page 61.
- ▶ Do not look directly into the beam of the Floor-Spot.
- ▶ When performing maintenance and repair work, remove the Floor-Spot from service and secure it against unintentional recommissioning.

⚠ CAUTION!

Risk of accident due to restricted view

Looking directly at the LED light in the floor spot can dazzle and temporarily impair eyesight.

- ▶ Do not look directly at the LED light in the floor spot.
- ▶ Practise travelling and working with the floor spot carefully.
- ▶ Do not change the factory setting.

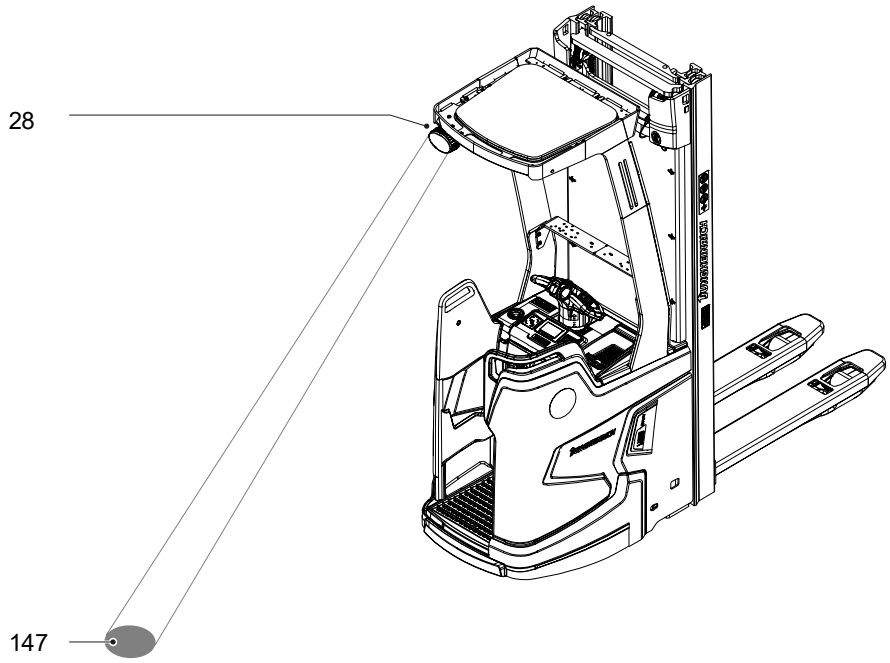

Item		Description
28	○	Red or blue LED light (Floor-Spot)
147	○	Dot of light

The position of the projected spot of light is factory pre-set.

The activated Floor-Spot forewarns people of the truck travel path by projecting a coloured light dot onto the floor at the set distance.

Activation conditions

Depending on the truck configuration, different manual or automatic activation conditions may have been defined for the Floor-Spot.

With some truck specifications, the operator cannot manually activate or deactivate the Floor-Spot.

The floor spot is operated using the control unit, see page 105.

Display symbols

Symbol	Meaning	Colour	Function
	Indicator lamp	Green	Illuminated when at least one indicator lamp is switched on.

Function button assignment

Symbol	Meaning	Function
	Floor-Spot	Activates or deactivates the Floor-Spot.

8.3 Touch Mode

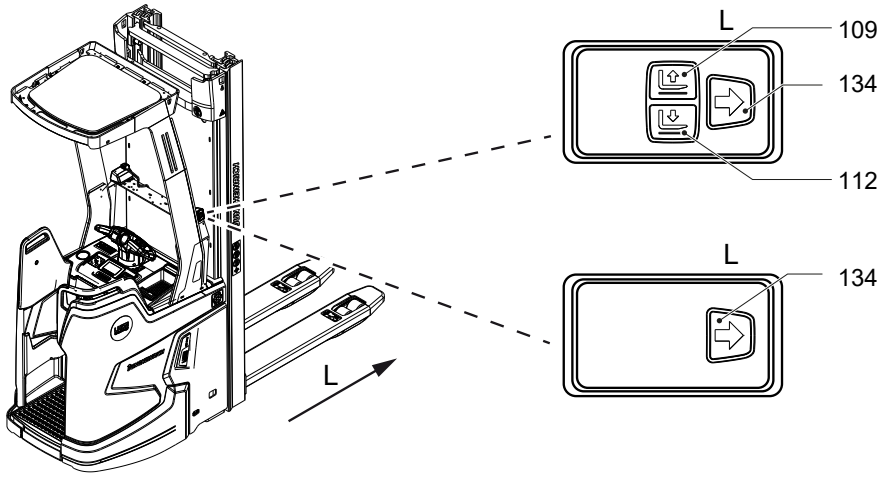

Item	Control/display		Function
109	"Lift" touch mode button	○	Lifts the load fork at a constant speed – see page 149.
112	"Lower" touch mode button	○	Lowers the load fork at a constant speed – see page 149.
134	"Travel in load direction" touch mode button	○	Moves the truck in the load direction, see page 138.

Touch mode enables operation of certain functions from an operating position at the side of the truck.

Display symbols

Symbol	Meaning	Colour	Function
	Touch mode	Yellow	Lights up when a travel request from touch mode is present. (Also displayed if the steer angle is outside the permissible range)
		Green	Lights up when touch mode is ready. (Steer angle in permissible range)

Control unit version

The touch-mode control unit version depends on the truck equipment.

8.4 Keyless Access System

The keyless access systems serve as a replacement for the key switch to release the truck.

The keyless access system allows an individual code to be allocated to each operator or group of operators.

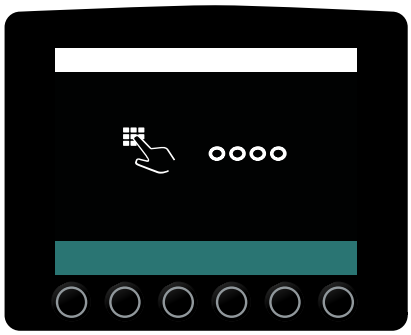

19

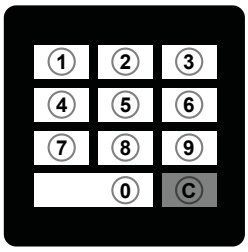

12

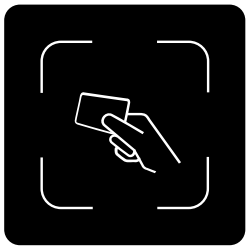

15

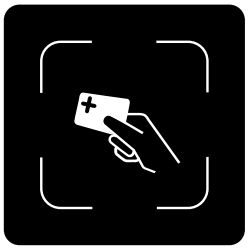

17

Item	Description
12	Keypad (EasyAccess PinCode): – Consists of keys 0 to 9 and C (clear) – Entry of 4-digit set-up and access codes – Up to 100 access codes can be stored
15	Transponder reader (EasyAccess Transponder): – Up to 100 transponders can be stored
17	Transponder reader Plus (EasyAccess Transponder): – The transponder reader Plus supports additional transponder standards.
121	Display unit (EasyAccess Softkey): – Description see page 105 – Entry of 4-digit set-up and access codes – Up to 10 access codes can be stored – For set-up and access codes with the numbers 1 to 4

➔ Operation of transponder reader Plus (17) corresponds to the operation of the standard transponder reader (15).

8.4.1 General Information about the Use of Keyless Access Systems

The default code is to be found on a sticker. When using for the first time, change the set-up code and remove the sticker!
– Default code: 1-2-3-4
– Factory set-up code: 2-4-1-2

➔ When allocating the codes, ensure the rider trucks are given a different code than pedestrian trucks.

➔ When a valid code is entered or a valid transponder used, a green tick appears in the display unit.
When an invalid code has been entered or a invalid transponder used, a red cross is displayed, and the entry must be repeated.

➔ If the truck is not used for a certain length of time, the display unit switches to standby mode. Pressing any key cancels the standby mode.

The following additional settings can be performed by the manufacturer's customer service department.

8.4.2 Commissioning the keypad and the transponder reader

If the truck is equipped with a keypad or a transponder reader, it can only be operated using the keys in the display unit. The keypad and the transponder reader have to be activated by the operating company.

8.4.2.1 Activating the keypad

Procedure

- Release the emergency disconnect switch, see page 134.
- Enter the default code 1-2-3-4 using the keys below the display unit (121).
  The truck is switched on.
- Press the key below the "Settings" symbol (123).
- Press the key below the "Change set-up code" symbol (124).
- Enter the set-up code 2-4-1-2 using the keypad (12).
  The set-up code entered is displayed.

When starting the truck for the first time, change the set-up code. The new set-up code must not be the same as the default set-up code or an access code.

Press the key below the "Delete" symbol (125).
The set-up code is deleted.

- Enter the new set-up code using the keypad (12).
- Press the key below the "Confirm" symbol (126).
  The new set-up code is displayed.

If the new set-up code was entered incorrectly, the procedure can be repeated using the key below the "Delete" symbol (125).

- To return to the main menu, press the key below the "Back" symbol (127).
- Delete the default code, see page 188.
- Create access codes, see page 187.

The keypad is active.

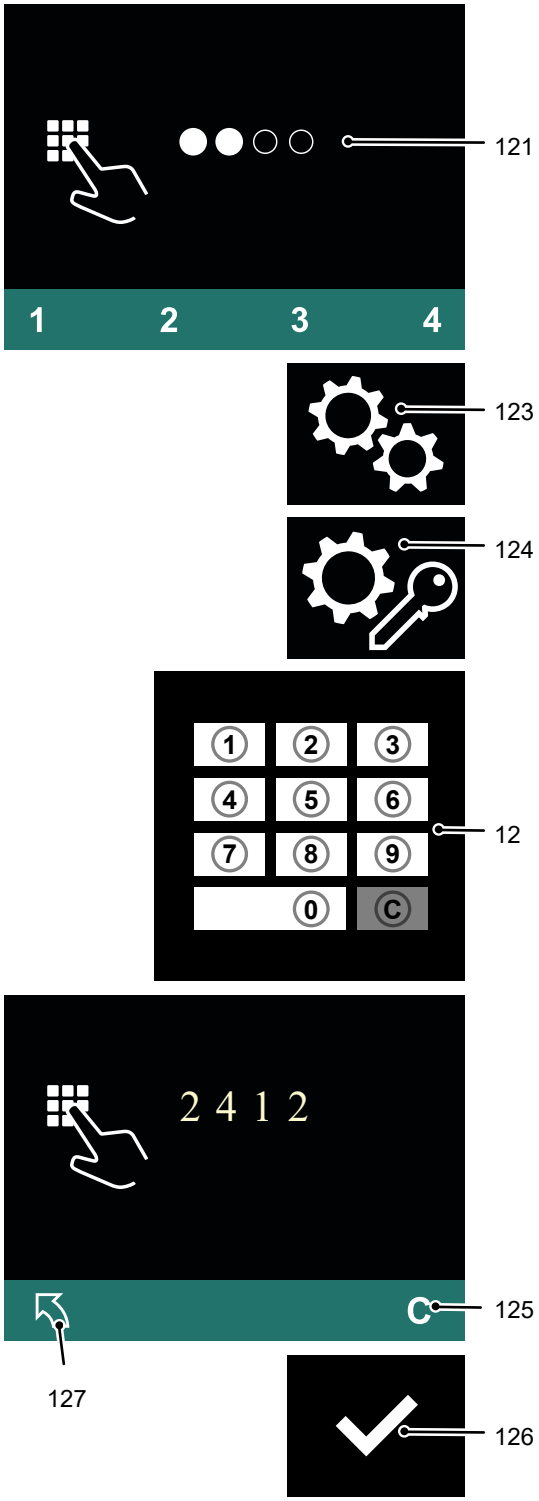

8.4.2.2 Activating the transponder reader

Procedure

- Release the emergency disconnect switch, see page 134.
- Enter the default code 1-2-3-4 using the keys below the display unit (121).

  The truck is switched on.
- Press the key below the "Settings" symbol (123).
- Press the key below the "Change set-up code" symbol (124).
- Enter the set-up code 2-4-1-2 using the keys below the display unit (121).

  The set-up code entered is displayed.
- Press the key below the "Delete" symbol (125).

  The set-up code is deleted.
- Hold a transponder in front of the transponder reader (15).

  This transponder thus becomes the set-up transponder.
- Press the key below the "Confirm" symbol (126).

  The code for the set-up transponder is displayed.

If the wrong transponder has been used, the procedure can be repeated using the key below the "Delete" symbol (125).

- To return to the main menu, press the key below the "Back" symbol (127).

The default code can no longer be used and must be deleted.

Delete the default code, see page 193.

- Add new transponders, see page 192.

The transponder reader is now active.

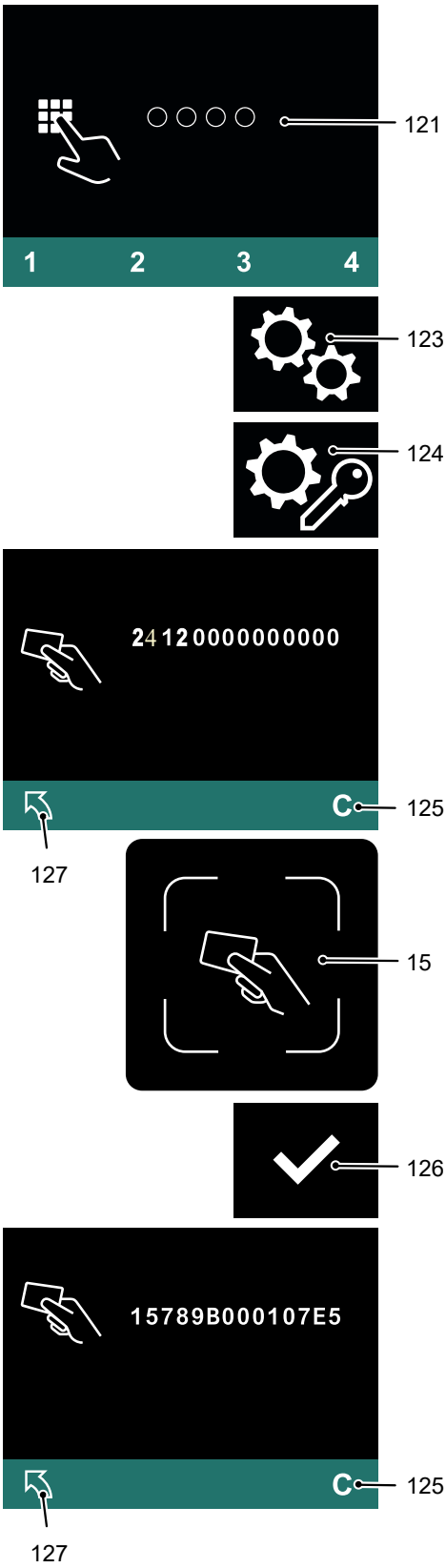

8.4.3 Using the Keypad

8.4.3.1 Switching on the truck with an access code

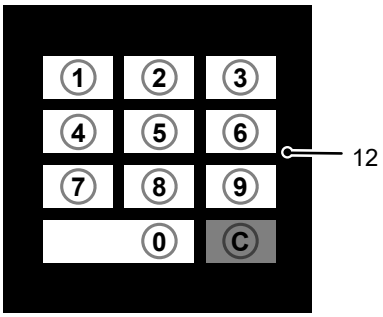

Procedure

- Release the emergency disconnect switch, see page 134.
- Enter the access code with the keypad (12).

The truck is switched on.

Procedure

- Press the key under the "Switch off" symbol (122) in the display unit.
- Press the Emergency Disconnect switch, see page 134.

The truck is switched off.

8.4.3.2 Switching off the truck

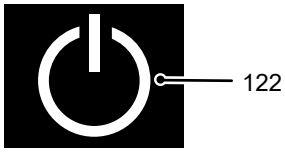

Procedure

- Press the key under the "Switch off" symbol (122) in the display unit.
- Press the Emergency Disconnect switch, see page 134.

The truck is switched off.

8.4.3.3 Changing the set-up code

Requirements

– The truck is switched on, see page 185.

Procedure

- Press the key below the "Settings" symbol (123).
- Press the key below the "Change set-up code" symbol (124).
- Enter the set-up code using the keypad (12).

  The set-up code entered is shown in the display unit (121) as filled-in circles.
- Press the key below the "Delete" symbol (125).

  The set-up code is deleted.
- Enter the new set-up code using the keypad (12).

➔ The new set-up code must be different from existing access codes.

- Press the key below the "Confirm" symbol (126).

  The new set-up code is displayed.

➔ If the new set-up code has been entered incorrectly, delete it and enter the correct set-up code.

To return to the main menu, press the key below the "Back" symbol (127).

The set-up code has been changed.

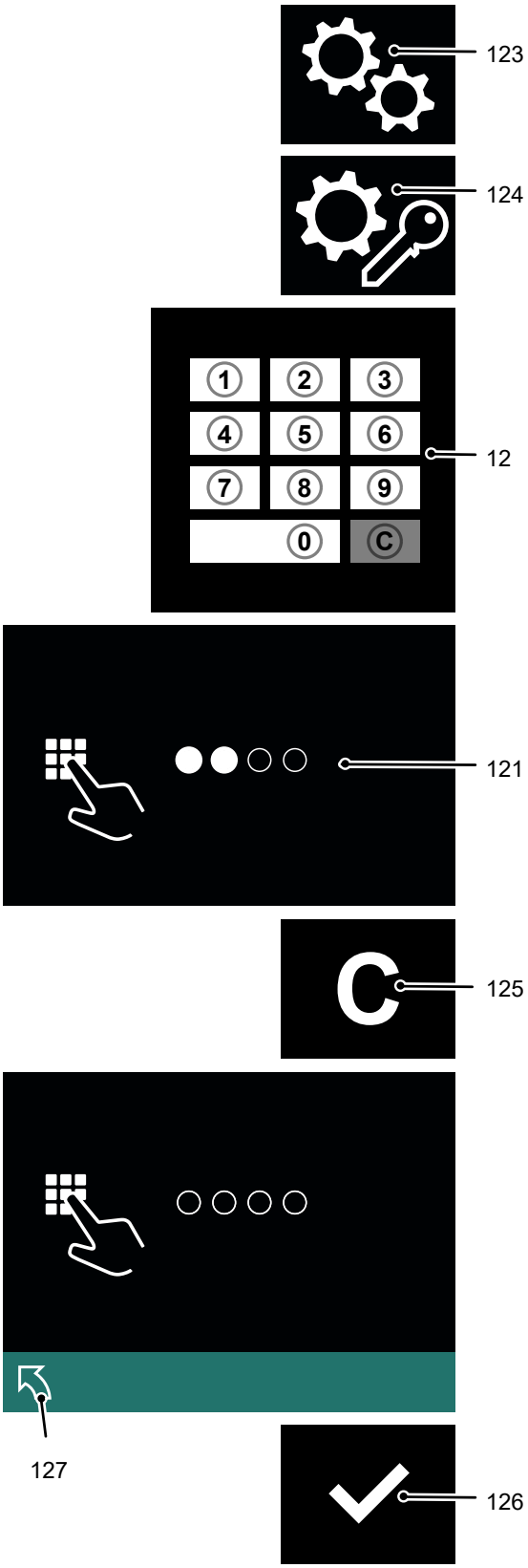

8.4.3.4 Adding a new access code

Requirements

– The truck is switched on, see page 185.

Procedure

- Press the key below the "Settings" symbol (123).
- Press the key below the "Edit access code" symbol (128).

  The set-up code is requested.
- Enter the set-up code using the keypad (12).

  All access codes are shown on the display unit (121).
- Press the key below the "Add" symbol (129).
- Enter a new access code using the keypad (12).

➔ The new access code must be different from existing access codes.

- Press the key below the "Confirm" symbol (126).

  The new access code is shown on the display unit (121).

➔ If the new access code has been entered incorrectly, delete it, see page 188, and enter the correct access code.

To return to the main menu, press the key below the "Back" symbol (127).

A new access code has been added.

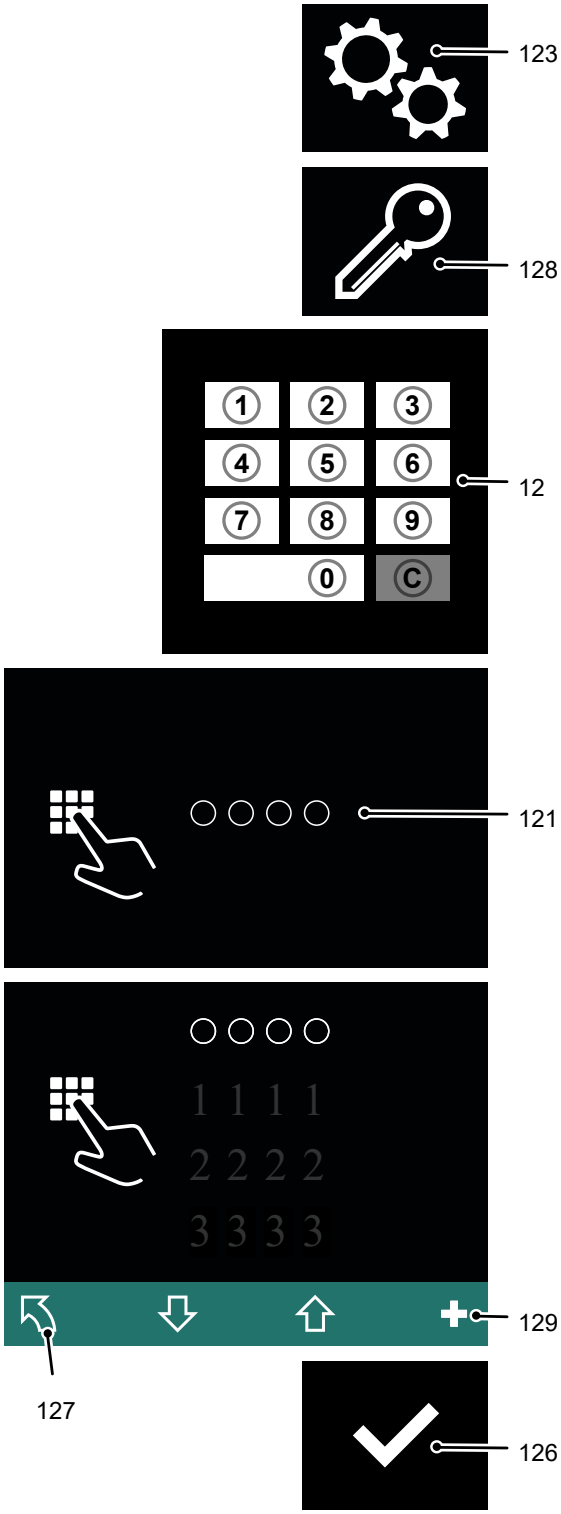

8.4.3.5 Deleting an access code

Requirements

– The truck is switched on, see page 185.

Procedure

- Press the key below the "Settings" symbol (123).
- Press the key below the "Edit access code" symbol (128).

  The set-up code is requested.
- Enter the set-up code using the keypad (12).

  All access codes are shown on the display unit (121).
- Select the access code to be deleted using the key below the "Down selection" symbol (130).
- Press the key below the "Delete" symbol (125).

  The access code has been deleted.
- To return to the main menu, press the key below the "Back" symbol (127).

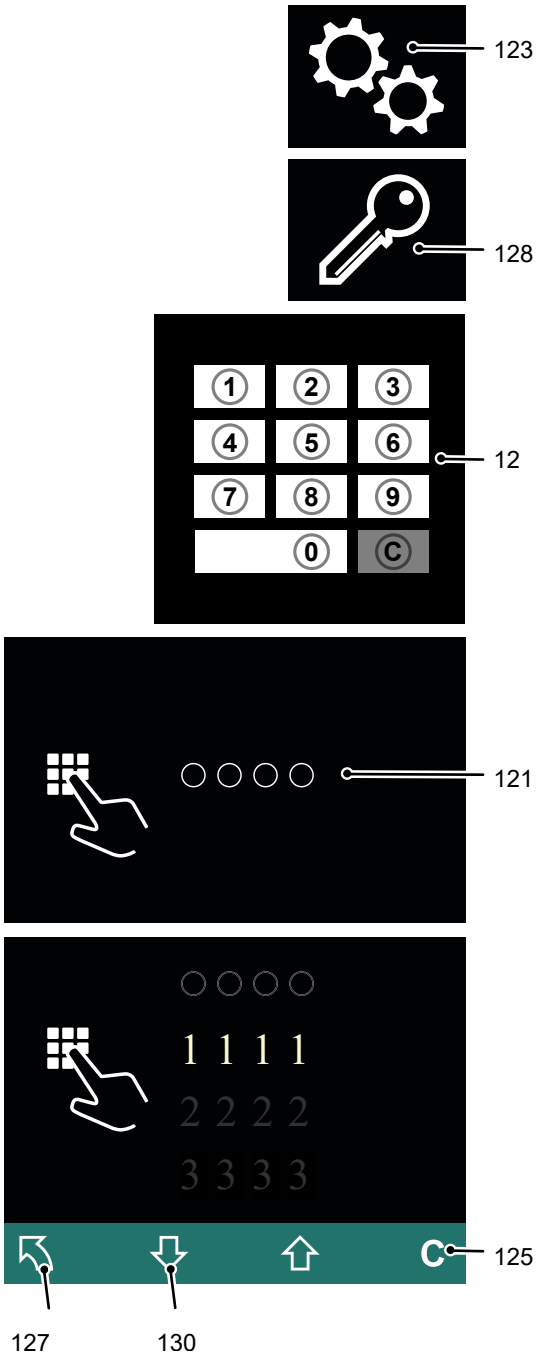

8.4.3.6 Displaying the log-in history

The use of the last different access codes is displayed during the log-in process. The last log-in is displayed first.

If multiple access codes are logged as being displayable simultaneously, the display area can be moved by scrolling forward or back.

Requirements

– The truck is switched on, see page 119.

Procedure

- Press the key below the "Settings" symbol (123).
- Press the key below the "Log-in process" symbol (131).
- Enter the set-up code using the keypad (12).
  The set-up code entered is shown in the display unit (121) as filled-in circles.
- To scroll forward, press the button under the "Down selection" symbol (130) as many times as necessary.
  The display area moves: Additional earlier log-ins are displayed.
- To scroll back, press the button under the "Up selection" symbol (132) as many times as necessary.
  The display area moves: More recent log-ins are displayed.
- To return to the main menu, press the key below the "Back" symbol (127).

The log-in process is displayed.

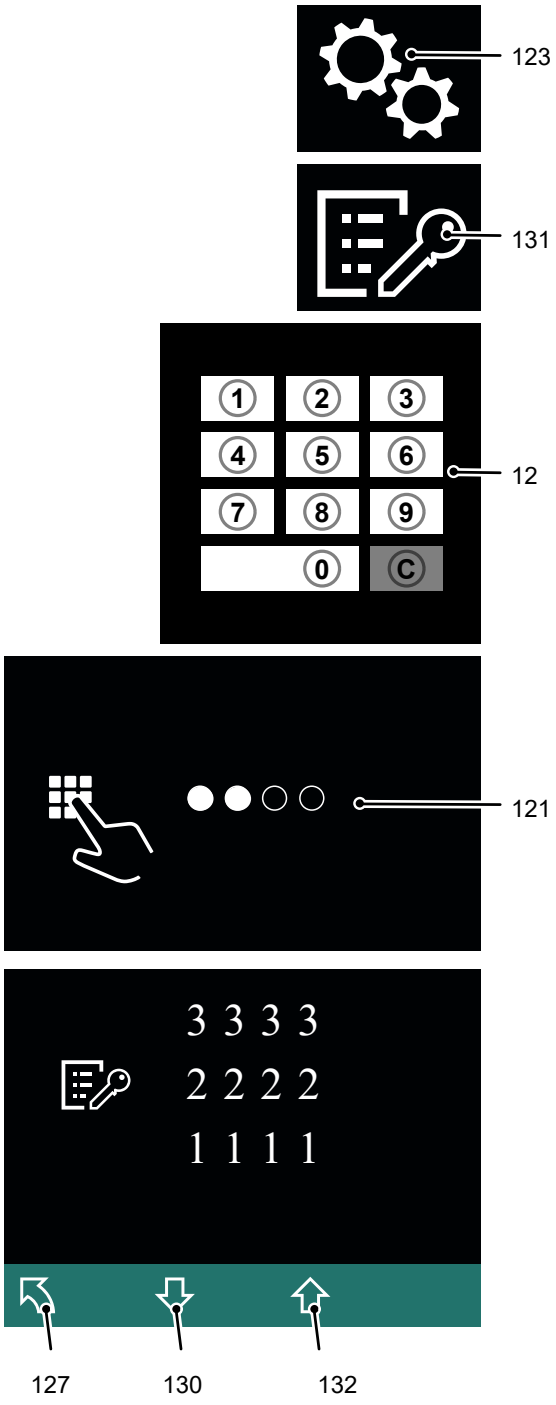

8.4.4 Operating the transponder reader

NOTICE

Take care not to damage the transponder. If the transponder is damaged, the truck cannot be switched on.

8.4.4.1 Switching on the truck with a transponder

Procedure

- Release the Emergency Disconnect switch, see page 134.
- Hold the transponder in front of the transponder reader (15).
  A green tick appears and remains until the transponder has been confirmed. If there is no confirmation within 20 seconds the access prompt appears.
- Press the button below the "Confirm" symbol (126).

The truck is switched on.

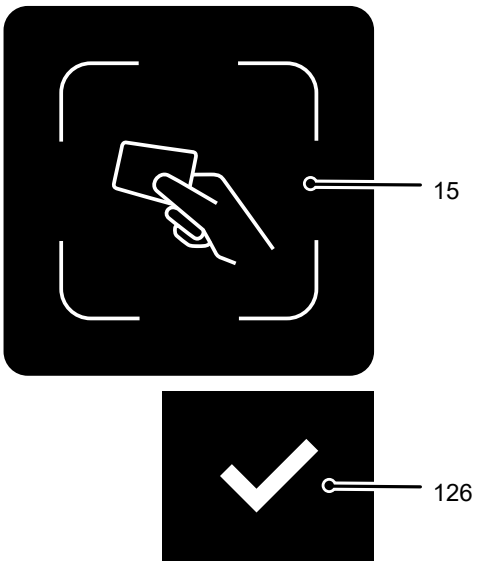

The truck can only be switched on when the display unit (121) is lit. If the display unit is in standby the code or transponder will not be recognised. Pressing any key cancels standby mode.

8.4.4.2 Switching off the truck

Procedure

- Press the key under the "Switch off" symbol (122) in the display unit.
- Press the Emergency Disconnect switch, see page 134.

The truck is switched off.

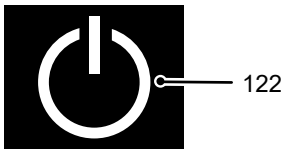

8.4.4.3 Changing the set-up transponder

Requirements

– The truck is switched on, see page 190.

Procedure

- Press the key below the "Settings" symbol (123).
- Press the key below the "Change set-up code" symbol (124).
- Place the set-up transponder on the transponder reader (15).

  The code of the set-up transponder is shown on the display unit (121).
- Press the key below the "Delete" symbol (125).

  A dashed line is shown.
- Place the new set-up transponder on the transponder reader (15).

➔ The new set-up transponder code must be different from existing transponder codes.

- Press the key below the "Confirm" symbol (126).

  The new code for the set-up transponder is displayed.

➔ If the wrong transponder has been used, the procedure can be repeated using the key below the "Delete" symbol (125).

To return to the main menu, press the key below the "Back" symbol (127).

The set-up transponder has been changed.

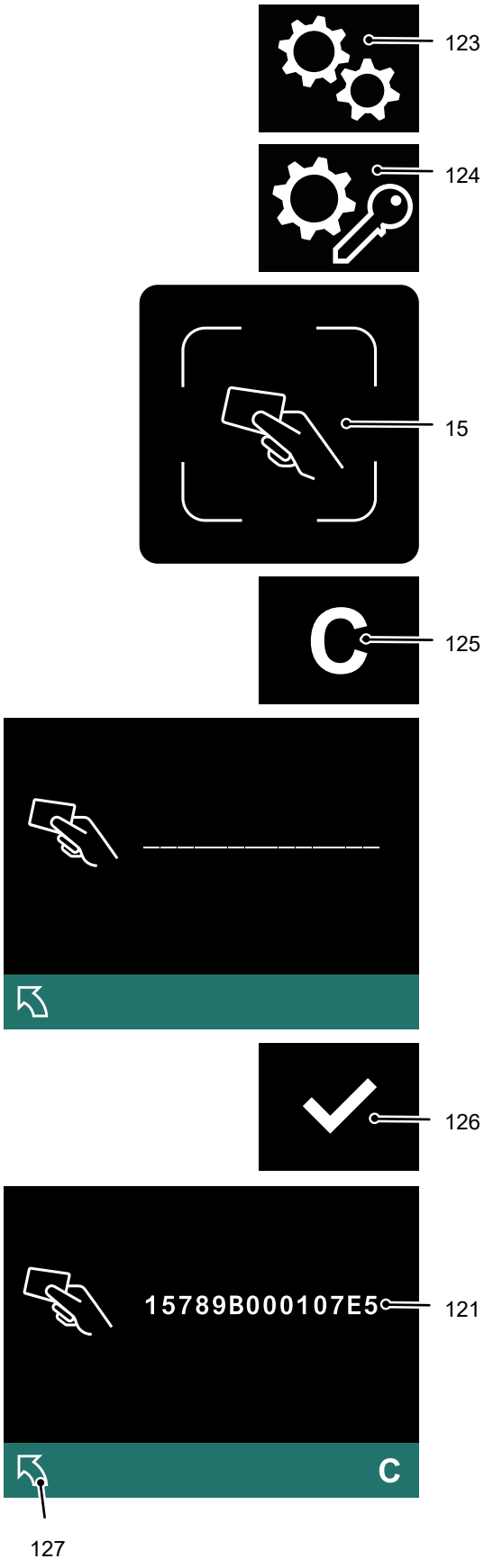

8.4.4.4 Adding a new transponder

Requirements

– The truck is switched on, see page 190.

Procedure

- Press the key below the "Settings" symbol (123).
- Press the key below the "Edit transponder" symbol (128).

  The set-up transponder is requested.
- Place the set-up transponder on the transponder reader (15).

  All transponder codes are shown on the display unit (121).
- Press the key below the "Add" symbol (129).
- Place the new transponder on the transponder reader (15).

➔ The new transponder code must be different from existing transponder codes.

- Press the key below the "Confirm" symbol (126).

  The new transponder code is displayed.

➔ If the wrong transponder has been used, delete it, see page 193, and add a correct transponder.

To return to the main menu, press the key below the "Back" symbol (127).

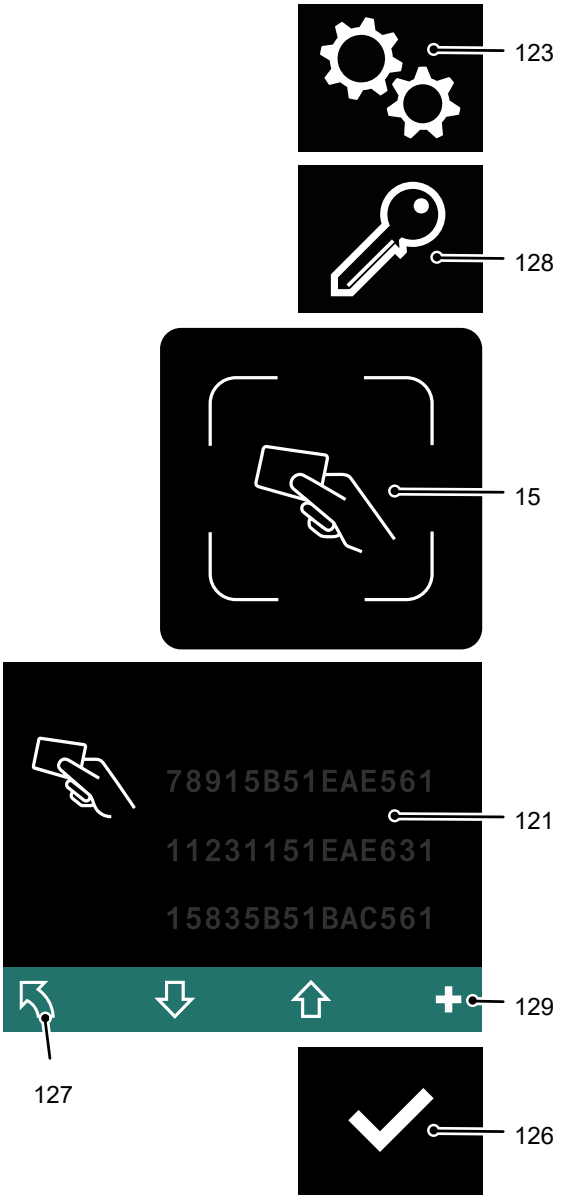

A new transponder has been added.

➔ The transponder codes saved are sorted first of all numerically and then alphabetically.

8.4.4.5 Deleting a transponder

Requirements

– The truck is switched on, see page 190.

Procedure

- Press the key below the "Settings" symbol (123).
- Press the key below the "Edit transponder" symbol (128).

  The set-up transponder is requested.
- Place the set-up transponder on the transponder reader (15).

  All transponder codes are shown on the display unit (121).
- Select the transponder code to be deleted using the key below the "Down selection" symbol (130).
- Press the key below the "Delete" symbol (125).

  The transponder has been deleted.
- To return to the main menu, press the key below the "Back" symbol (127).

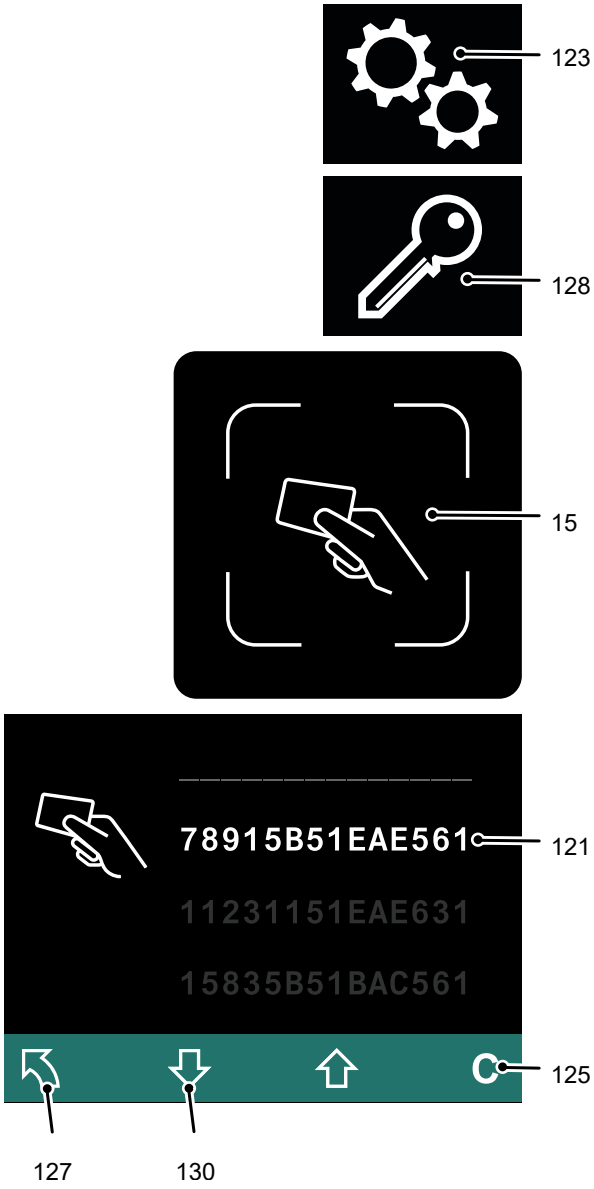

8.4.4.6 Displaying the log-in history

The use of the last different transponders is displayed during the log-in process. The last log-in is displayed first.

If multiple transponders are logged as being displayable simultaneously, the display area can be moved by scrolling forward or back.

Requirements

– The truck is switched on, see page 119.

Procedure

- Press the key below the "Settings" symbol (123).
- Press the key below the "Log-in process" symbol (131).
- Place the set-up transponder on the transponder reader (15).
- To scroll forward, press the button under the "Down selection" symbol (130) as many times as necessary.

  The display area moves: Additional earlier log-ins are displayed.
- To scroll back, press the button under the "Up selection" symbol (132) as many times as necessary.

  The display area moves: More recent log-ins are displayed.
- To return to the main menu, press the key below the "Back" symbol (127).

The log-in process is displayed.

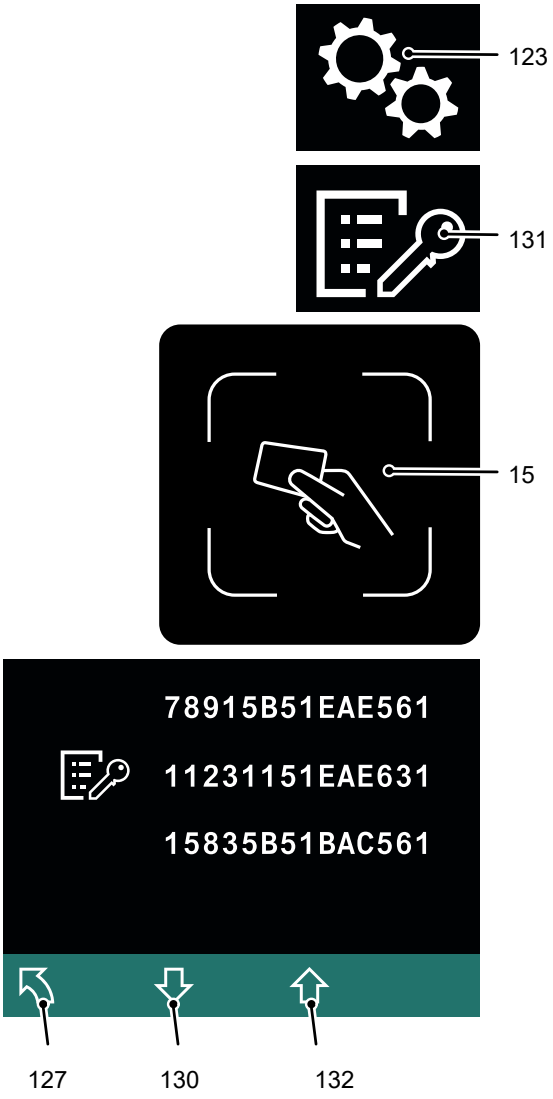

8.5 positionCONTROL

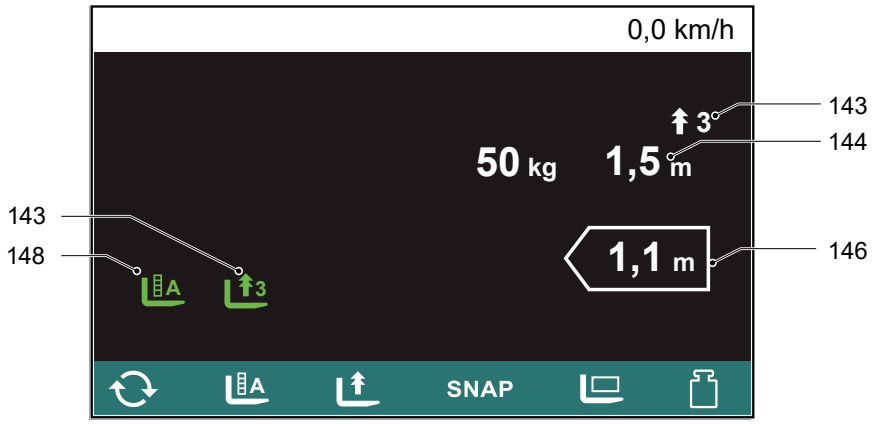

Item	Display or control element	Function
143	Rack height select (storage slot)	Shows the currently selected lift height storage slot.
144	Rack height select (value)	Displays the lift height assigned to the selected storage slot.
146	Current load height	Shows the current height of the load.
148	Rack height select (rack type)	Shows the currently selected rack type.

positionCONTROL rack height select (○) allows the operator to save a series of lift heights and then access them as required. When rack height select is activated, the load handler stops at the selected lift height.

The rack type preselection expands the number of lift height storage slots by grouping four respective lift heights to form a rack type.

The rack type preselection is available on trucks with 6-inch display (○) only.

Display symbols

Symbol	Meaning	Colour	Function
	Active rack height select (positionCONTROL)	Green	Shows the currently active rack height select. On the symbol shown, lift height 3 is active.
	Currently selected lift height (positionCONTROL)	White	Shows the height to which the active rack height select is assigned.
	Active rack type preselection (positionCONTROL)	Green	Shows the currently active rack type preselection. On the symbol shown, rack type A is active.

Function button assignment

Symbol	Meaning	Function
	Rack type preselection (positionCONTROL)	Switches through the preset rack types.
	Rack height select (positionCONTROL)	Switches through the preset lift heights.
	SNAP (positionCONTROL)	Activates or deactivates the SNAP function.
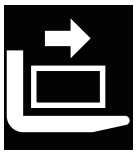	Storage Support (positionCONTROL)	Activates or deactivates the storage support.

Saving lift heights

Procedure

- Truck with rack type preselection: Press the "rack type preselection" function key to select the required rack type.

➔ Rack types are represented by capital letters (A-D).

- Press the "rack height select" function key to select the required lift height storage slot.

➔ Lift heights are represented by numbers (1-3).

- Raise the load handler to the lift height to be saved.
- Hold down the "rack height select" function key for a few seconds.

The lift height is saved to the selected storage slot.

Accessing saved lift heights

Procedure

- Truck with rack type preselection: Press the "rack type preselection" function key to select the required rack type.

➔ Rack types are represented by capital letters (A-D).

- Press the "rack height select" function key to select the required lift height storage slot.

➔ Lift heights are represented by numbers (1-3).

The lift height saved in the selected storage slot is activated and shown on the display unit.

8.5.1 SNAP Function

The SNAP function makes it easier for the operator to approach the saved lift heights when lifting and lowering the load fork.

Procedure

- When the load fork gets near a saved lift height during lifting or lowering, briefly ease off the "raise load fork" button or "lower load fork" button (less than 60% actuation).
  The load fork approaches the saved lift height and stops there.

With the standard setting, each approach of a saved lift height is confirmed by a short signal tone. The transmitter can be muted if required, see page 177.

➔ When using the SNAP function, the storage support is activated automatically.

8.5.2 Storage Support

When storage support is activated, the load handler stops 100 mm above the preselected lift height.

Procedure

- Press the "storage support" function button.

The load handler stops 100 mm above the saved lift heights.

➔ When using the SNAP function, the storage support is activated automatically.

8.6 operationCONTROL

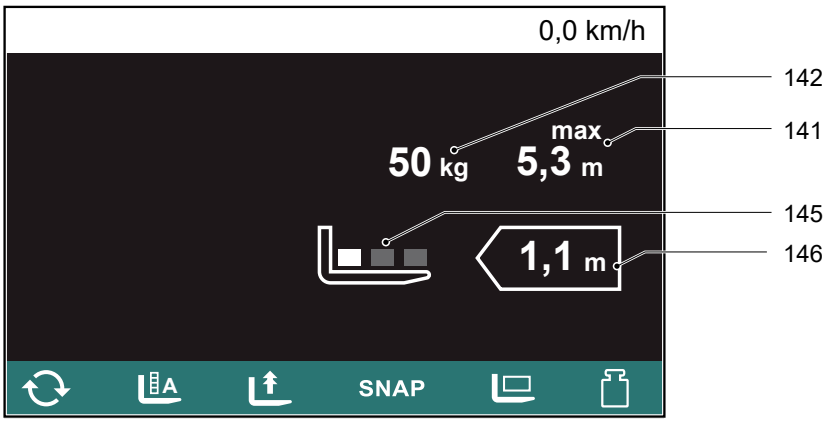

The operationCONTROL assistance system makes it easier for the operator to work with loads by, for example, displaying the weight and remaining lift height of a raised load.

Item	Display or control element	Function
141	Remaining lift height	Shows the lift height to which the current load may be raised according to the capacity plate, see page 61.
142	Current load weight	Shows the weight of the raised load.
145	Load centre pre-selection	Indicates the area of the load handler in which the load centre is currently set.
146	Current load height	Shows the current height of the load.

Function button assignment

Symbol	Meaning	Function
	Load centre (operationCONTROL)	Switches through the various load centre presettings.
	Fine weighing	Press briefly: Activates or deactivates the "fine weighing" function.
		Hold down (approx. 3 seconds): Activates tare mode.

8.6.1 Adjusting the Load Centre Setting (○)

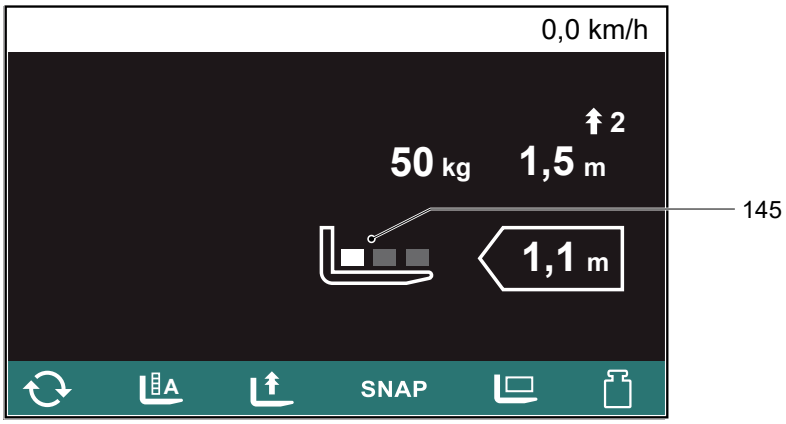

The load centre preselection (145) allows the operator to set the area of the load handler in which the load centre is currently located.

Procedure

- Press the "load centre" function key until the desired load centre selection appears on the display.

The remaining lift height displayed is adjusted to the modified load centre setting.

Display symbols

Symbol	Meaning
	Load centre is at the rear of the load handler, closer to the mast.
	Load centre is at the front of the load handler, closer to the fork tips.
	Load centre is central on the load handler.

Function button assignment

Symbol	Meaning	Function
	Load centre (operationCONTROL)	Switches through the various load centre presettings.

8.7 Lift Limit (○)

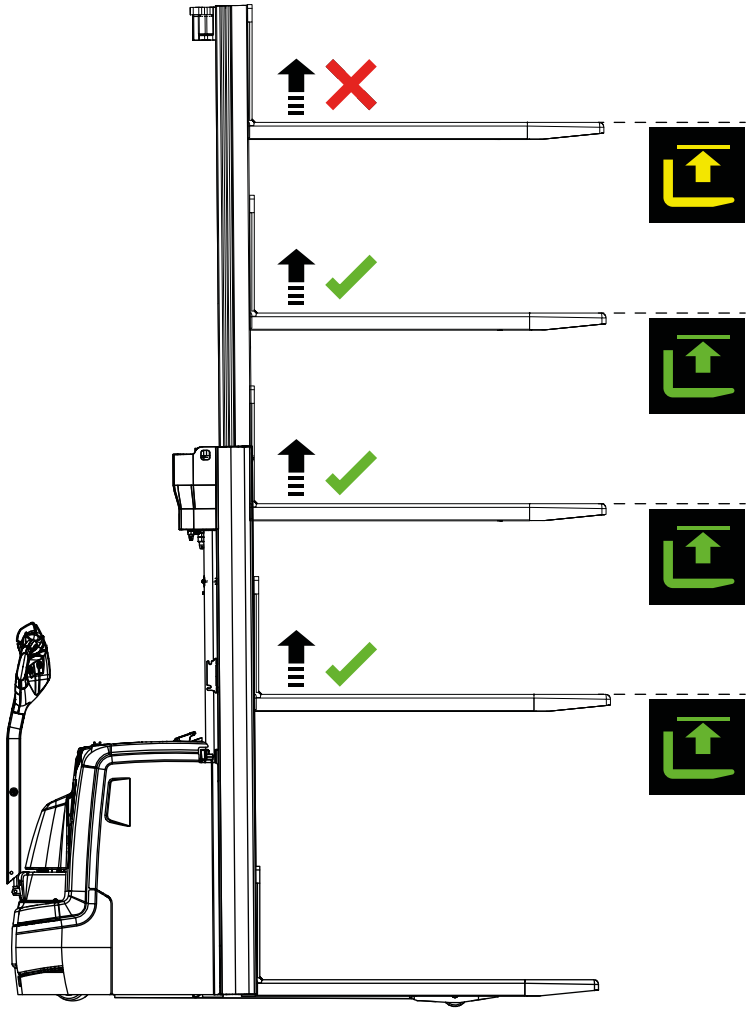

On trucks with a lift limit, the load fork stops automatically when a set lift height is reached during the lifting process. In addition to the fixed end height, it is also possible to set intermediate heights, which can be overridden.

Display symbols

Symbol	Meaning	Colour	Function
	Lift limit reached (intermediate height)	Flashing green or steady green	Lights up when the mast lift limit has been reached. The lift limit can be overridden.
	Lift limit reached (end height)	Yellow	Lights up when the mast lift limit has been reached. The lift limit cannot be overridden.

Overriding an intermediate height

- Raise the load fork to the automatic cut-out.
  The display symbol flashes green.
- Release the "raise load fork" button.
  The green display symbol lights up continuously.
- Press the "raise load fork" button twice in quick succession and hold (double-click).

The load fork is raised beyond the intermediate height.

➔ You can only override an intermediate height by means of a double-click. If you press the "raise load fork" button only once, you will not be able to raise the load fork any further.

8.8 zoneCONTROL

The assistance system makes it possible to mark various types of hazardous area in the warehouse as zones, use cyclical remote distance measurements to detect potential collisions with equipped personnel and trucks and reduce the likelihood of a collision.

The assistance system does not feature any safety functions and does not interfere with the safety functions of the truck. Depending on the situation, it is possible to limit or reduce the travel speed. The assistance system does not brake the truck to a standstill.

The assistance system does not release the operator from the duty to observe the applicable safety regulations for truck operation – refer to the truck operating instructions, e.g. with regard to visibility when driving.

➔ **Before using the assistance system, read the separate operating instructions**
They contain comprehensive information about operation as well as important safety instructions and warning information.

8.9 Fleet Management System

➔ If equipped with a Jungheinrich fleet management component, see the "Jungheinrich fleet management system" operating instructions.

8.10 Forks

8.10.1 Adjusting the forks

ERC 214bi-216bi only

⚠ WARNING!

Unsecured and incorrectly adjusted forks can cause accidents

Before adjusting the forks make sure the retaining bolts (155) are fitted.

▶ Adjust the forks so that both forks are equidistant from the outside edge of the fork carriage.

▶ Engage the locking pin in a groove to prevent the forks from moving accidentally.

▶ The load centre of gravity must be located centrally between the forks.

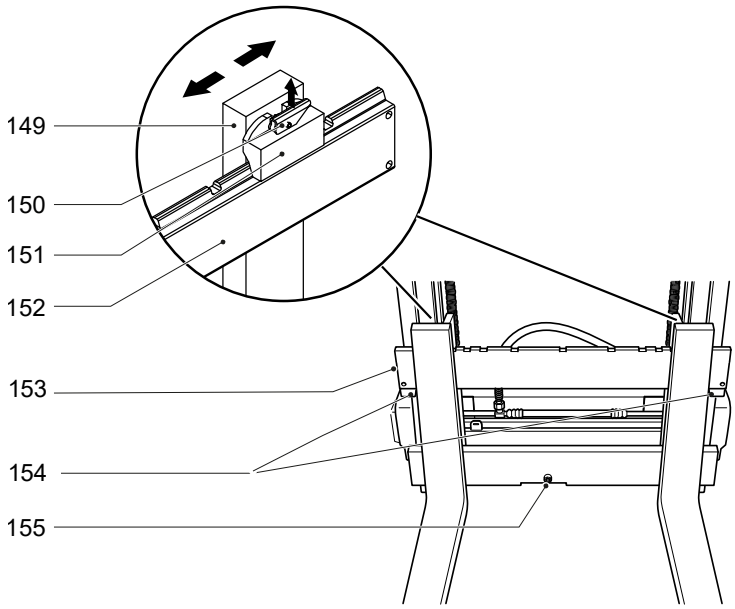

Item	Description
149	Fork arms
150	Locking lever
151	Fork stop
152	Fork carriage
154	"Fork arm safety device" (both sides)
155	Retaining bolt M12 x 25

Requirements

– Park the truck securely – see page 125.

Procedure

- Swing up the locking lever (150).
- Push the fork arms (149) on the fork carriage (152) into the correct position.

To pick up the load securely, the fork arms (149) must be spread as far apart as possible and positioned centrally with respect to the fork carriage. The load centre must lie centrally between the fork arms (149).

- Swing the locking lever (150) down and move the fork arms until the locking pin engages in a slot.

Fork arms adjusted.

8.10.2 Replacing the forks

⚠ WARNING!

Risk of injury due to unsecured fork arms

You can injure your legs when replacing the forks.

- ▶ Never pull the fork arms towards your body.
- ▶ Always push the fork arms away from your body.
- ▶ Secure heavy fork arms with lifting accessories and a crane before pushing them down from the fork carriage.
- ▶ After replacing the fork arms, fit the retaining bolt (155) and make sure that the bolt is seated correctly. Retaining bolt torque: 84 Nm.

⚠ CAUTION!

Risk of accident and injury due to the use of impermissible fork arms

The fork arm design approved for a truck type is specified by the manufacturer. The configuration of the mast and control components of the truck is based on the approved design. If fork arms with a different design are used, accidents may occur (e.g. if the fork arms touch the ground or in the event of a collision due to the altered dimensions).

- ▶ Only use fork arms in the design approved for the relevant truck type.

Approved fork arm design
2 A

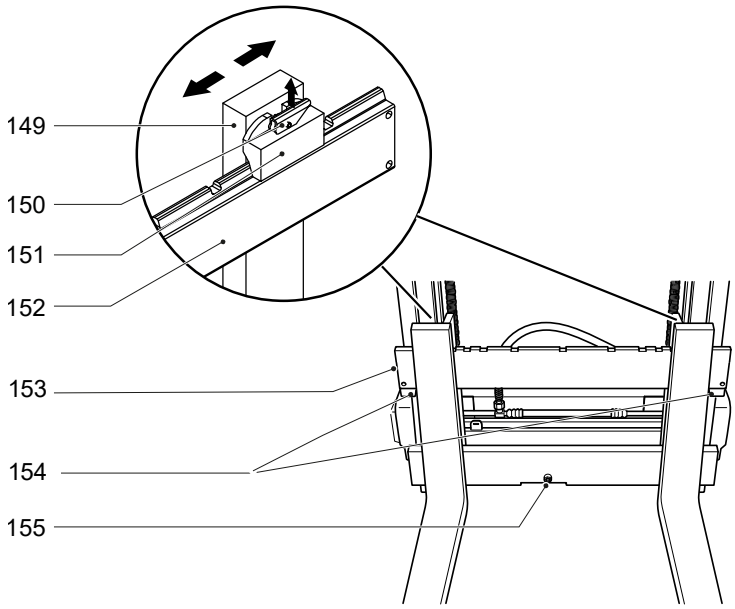

Item	Description
149	Fork arms
150	Locking lever
151	Fork stop
152	Fork carriage
154	"Fork arm safety device" (both sides)
155	Retaining bolt M12 x 25

Requirements

– Truck prepared for maintenance and repair work (see page 217).
– Load handler lowered, fork arms not touching the ground.

Procedure

- Remove the retaining bolt (155).
- Release the fork stop (151).
- Carefully push the forks up to the middle of the fork carriage and lift them out over the recess.

The forks are now dismantled from the load carriage and can be replaced.

F Truck maintenance

1 Spare Parts

To ensure safe and reliable operation, use only the manufacturer's original spare parts.

The manufacturer’s original spare parts are consistent with the manufacturer’s specifications and guarantee the highest possible quality of safety, size accuracy and material.

The installation or use of non-original spare parts can negatively affect the specified properties of the product and impair safety. The manufacturer cannot be held liable for damage caused by the use of non-original spare parts.

The product-related electronic spare parts catalogue can be found at (www.jungheinrich.de/spare-parts-search) by entering the serial number.

➔ The serial number can be found on the data plate, see page 65.

2 Operational Safety and Environmental Protection

The inspections and maintenance tasks listed in chapter "Maintenance, Inspection and Changing of Maintenance Parts Requiring Replacement" must be performed according to the defined service intervals – see page 233.

The manufacturer recommends the replacement of the maintenance parts also listed in chapter "Maintenance, Inspection and Changing of Maintenance Parts Requiring Replacement" according to the specified replacement intervals – see page 233.

⚠ WARNING!

Risk of accidents and component damage

Any modification to the truck is prohibited.

▶ Safety equipment must not be modified.

▶ The operating speeds of the truck must not be changed.

▶ Laminating over the protective screen panels is prohibited.

Exception: Operating companies should only make changes or have changes made to powered industrial trucks if the manufacturer is no longer operating in the field and there is no successor to the business; operating companies must however:

– Ensure that the changes to be made are planned, tested and performed by a specialist engineer in industrial trucks taking safety into account.
– Keep permanent records of the construction, tests and completion of changes
– Carry out and have authorised the respective changes to the capacity data plates, decals and stickers as well as the operating instructions and workshop manuals
– Attach a permanent and clearly visible marking to the truck indicating the types of changes made, the date of the changes and the name and address of the organisation responsible for the work.

NOTICE

Only original spare parts are subject to the manufacturer's quality control. To ensure safe and reliable operation, use only the manufacturer's spare parts.

For safety reasons, only components which have been specially agreed by the manufacturer for this truck may be installed near the computer, controllers and wire guidance sensors (antennae). These components (computers, controllers, wire guidance sensors (antennae)) must therefore not be replaced by similar components from other trucks of the same series.

On completion of inspection and service work, carry out the operations listed in the “Recommissioning the truck after cleaning or maintenance work section, see page 230.

3 Maintenance Safety Regulations

⚠ WARNING!

Risk of accident when working under the load handler or truck when not correctly secured

Failure to secure the raised load handler or truck correctly can result in uncontrolled lowering of the load handler or can cause the truck to tip or slip.

- ▶ Secure the raised load handler or truck such that no lowering, tipping or slipping is possible.
- ▶ The prescribed instructions must be followed when raising the truck – see page 73.

Maintenance and repair personnel

The manufacturer has a customer service department specially trained for these tasks. A maintenance contract with the manufacturer will support trouble-free operation.

Truck maintenance, repair work and changing of parts requiring replacement must only be carried out by specialist personnel. The activities to be carried out are divided into the following target groups.

Customer Services

Customer Services are specially trained in the use of the truck and are able to carry out maintenance and repairs independently. Customer Services are aware of the relevant standards, guidelines and safety regulations as well as potential risks.

Operating company

The maintenance personal of the operating company has the technical expertise and experience to perform the activities in the maintenance check list for the operating company. The maintenance and repair work to be performed by the operating company are also written down, see page 217.

3.1 Welding

⚠ WARNING!

Fire hazard

Welding operations on the truck can damage or ignite components.

- ▶ Do not performing welding operations on the truck.

3.2 Working on the electrical system

⚠ WARNING!

Risk of accidents due to electrical current

Make sure the electrical system is voltage-free before starting work on it. The capacitors in the control unit must be completely discharged. The capacitors are fully discharged approx. 10 minutes after disconnecting the electrical system from the battery.

Before starting maintenance on the electrical system:

- ▶ Only suitably trained electricians may operate on the truck's electrical system.
- ▶ Before working on the electrical system, take all precautionary measures to avoid electric shocks.
- ▶ Park the truck securely (see page 125).
- ▶ Remove any rings, metal wristbands etc.

⚠ CAUTION!

Risk of fire due to use of flammable cleaning agents

Using flammable cleaning agents increases the risk of fire.

- ▶ Do not use any flammable cleaning agents when cleaning.
- ▶ Disconnect the battery before starting cleaning work.
- ▶ Before cleaning, take necessary safety measures to prevent spark formation (e.g. due to short circuits).

3.3 Consumables and used parts

⚠ CAUTION!

Consumables and used parts represent an environmental hazard

- ▶ Dispose of used operating materials and used parts in accordance with the applicable environmental protection regulations.
- ▶ Oil changes may only be performed by the manufacturer's customer service department.
- ▶ Note the safety regulations when handling these substances.

3.4 Wheels

⚠ WARNING!

The use of wheels that do not match the manufacturer's specifications can result in accidents

The quality of wheels affects the stability and performance of the truck.

Uneven wear reduces truck stability and increases the stopping distance.

- ▶ After replacing wheels, make sure the truck is not skewed.
- ▶ Always replace wheels in pairs, i.e. left and right at the same time.

When replacing wheels fitted at the factory, only use the manufacturer’s original spare parts. Otherwise the truck's rated performance cannot be ensured, see page 207.

The drive wheel must only be replaced by authorised service personnel.

3.5 Hydraulic system

⚠ WARNING!

Leaky hydraulic systems can result in accidents

Hydraulic oil can escape from leaky and faulty hydraulic systems.

- ▶ Report any defects immediately to your supervisor.
- ▶ Mark defective truck and take out of service.
- ▶ Do not return the industrial truck to service until you have identified and rectified the fault.
- ▶ Remove any spilled hydraulic immediately with an appropriate bonding agent.
- ▶ The bonding agent / consumable mixture must be disposed of in accordance with regulations.

⚠ WARNING!

Faulty hydraulic hoses can result in injury and infection

Pressurised hydraulic oil can escape from fine holes or hairline cracks in the hydraulic hoses. Brittle hydraulic hoses can burst during operation. People standing near the truck can be injured by the hydraulic oil.

- ▶ Call for a doctor immediately in the event of an injury.
- ▶ Do not touch pressurised hydraulic hoses.
- ▶ Report any defects immediately to your supervisor.
- ▶ Mark defective truck and take it out of service.
- ▶ Do not return the industrial truck to service until you have identified and rectified the fault.

NOTICE

Checking and replacing hydraulic hoses

Hydraulic hoses can become brittle through age and must be checked at regular intervals. The application conditions of the industrial truck have a considerable impact on the ageing of the hydraulic hoses.

- ▶ Check the hydraulic hoses at least once per year and replace if necessary.
- ▶ In the case of heavy-duty operation, the inspection intervals must be reduced accordingly.
- ▶ Under normal operating conditions, preventive replacement of the hydraulic hoses is recommended after 6 years. The owner must carry out a risk assessment to ensure safe, prolonged use. The resulting protection measures must be observed and the inspection interval reduced accordingly.

3.6 Lift Chains

⚠ WARNING!

Risk of accident from non-lubricated and incorrectly cleaned lift chains

Lift chains are safety-critical parts. Lift chains must not show signs of serious contamination. Lift chains and pivot pins must always be clean and sufficiently lubricated.

- ▶ The lift chains are cleaned by wiping or brushing. Significant contamination can be softened by a paraffin derivative such as petroleum.
- ▶ Do not clean lift chains with high-pressure steam jets or chemical cleaning agents.
- ▶ Immediately after cleaning, dry the lift chain with compressed air and apply a chain spray.
- ▶ Lift chains must be unloaded when lubricated; to do this, fully lower the load handler.
- ▶ Lubricate a lift chain with particular care around the pulleys.

3.7 Energy saving components

Tiller height adjustment

⚠ CAUTION!

Risk of accident due to high pretension

The steering column with height adjustment contains a gas strut with high pretension. Incorrect opening may result in accidents.

- ▶ The gas strut must only be installed and removed by authorised service personnel.

Operator platform with adjustable suspension

⚠ CAUTION!

Risk of accident due to high pre-tension

The adjustable suspension of the stand-on platform contains a gas strut with high pre-tension. Incorrect opening may result in accidents.

- ▶ The gas strut must only be installed and removed by authorised service personnel.

4 Lubricants and Lubrication Schedule

4.1 Handling consumables safely

⚠ WARNING!

Improper handling is hazardous to health, life and the environment

Consumables can be flammable.

- ▶ Keep consumables away from hot components and naked flames.
- ▶ Always keep consumables in prescribed marked containers.
- ▶ Always fill consumables in clean containers.
- ▶ Do not mix up different grades of consumable. The only exception to this is when mixing is expressly stipulated in the Operating Instructions.

⚠ WARNING!

Improper handling of oils can be hazardous

Oils (chain spray / hydraulic oil) are flammable and poisonous.

- ▶ Dispose of used oils in accordance with regulations. Store used oil safely until it can be disposed of in accordance with regulations.
- ▶ Do not spill oil.
- ▶ Spilled oils must be removed immediately with an appropriate bonding agent.
- ▶ The mixture consisting of the bonding agent and oil must be disposed of in accordance with regulations.
- ▶ Observe national regulations when handling oils.
- ▶ Wear safety gloves when handling oils.
- ▶ Prevent oil from coming into contact with hot motor parts.
- ▶ Do not smoke when handling oil.
- ▶ Avoid contact and digestion. If you swallow oil do not induce vomiting but seek medical assistance immediately.
- ▶ Seek fresh air after breathing in oil fumes or vapours.
- ▶ If oil has come into contact with your skin, rinse your skin with water.
- ▶ If oil has come into contact with your eyes, rinse them with water and seek medical assistance immediately.
- ▶ Replace oil-soaked clothing and shoes immediately.

⚠ CAUTION!

Spilled consumables can cause slipping and endanger the environment

Risk of slipping from spilled consumables. The risk is greater when combined with water.

- ▶ Do not spill consumables.
- ▶ Spilled consumables must be removed immediately with an appropriate bonding agent.
- ▶ The bonding agent / consumable mixture must be disposed of in accordance with regulations.

⚠ CAUTION!

Consumables and used parts represent an environmental hazard

- ▶ Dispose of used operating materials and used parts in accordance with the applicable environmental protection regulations.
- ▶ Oil changes may only be performed by the manufacturer's customer service department.
- ▶ Note the safety regulations when handling these substances.

Handling consumables

Consumables must always be handled correctly. Follow the manufacturer’s instructions.

4.2 Consumables

Consumables from lubrication plan

Code	Order no.	Supplied quantity	Description	Used for	Volume
A	51132827	5,0 l	Jungheinrich Hydraulic oil [1]	Hydraulic system	
	51132826	1,0 l			
B	50380904	5,0 l	Titan Gear HSY 75W-90	Transmission	1,05 l [2]
C	51081875	5,0 l	Cold store hydraulic oil Renolin MR 310	Hydraulic system	
E	29202050	1,0 kg	Polylub GA 352P	Lubrication service	
G	29201280	0,4 l	Chain spray	Chains	

1) The trucks are factory-equipped with a special hydraulic oil (Jungheinrich hydraulic oil with blue colouration) and the cold store hydraulic oil (red colouration). The Jungheinrich hydraulic oil is available only from the Jungheinrich service department. Use of a named alternative hydraulic oil is permitted, but may lead to a decline in functionality. The Jungheinrich hydraulic oil may be mixed with one of the named alternative hydraulic oils.

2) The gear oil value is a guideline. The spur wheel should be dipped approx. 2 mm into the hydraulic oil.

➔ For cold store applications, the Jungheinrich hydraulic oil (A) and the cold store hydraulic oil (C) must be mixed in a 1:1 ratio.

Grease guidelines

Code	E
Saponification	Lithium
Dew point	>220 °C
Worked penetration at 25 °C	280 - 310
NLG1 class	2
Operating temperature	-38 °C / +120 °C

4.3 Lubrication Schedule

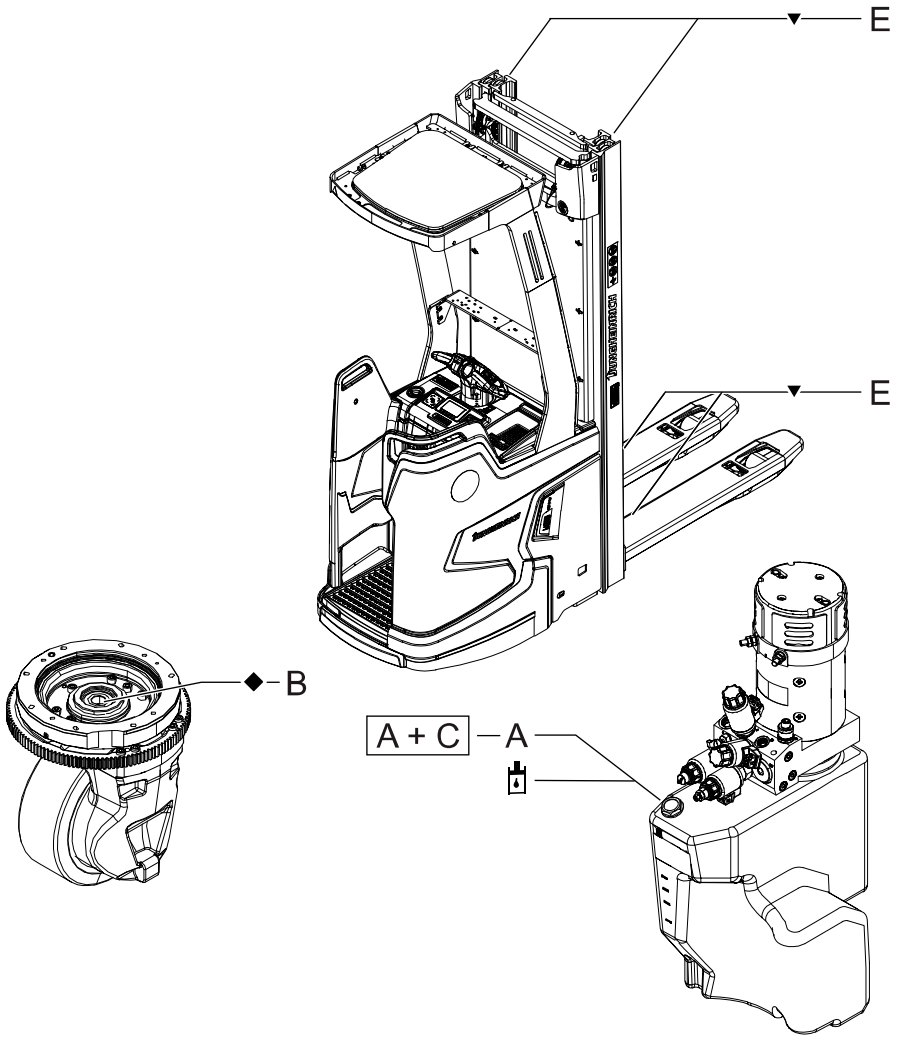

▼	Contact surfaces		Cold store application
⬇	Grease nipple	◆	Gear oil filler neck
	Hydraulic oil filler plug		

5 Maintenance and repairs

5.1 Preparing the truck for maintenance and repair work

⚠ WARNING!

Risk of accident when working under the load handler or truck when not correctly secured

Failure to secure the raised load handler or truck correctly can result in uncontrolled lowering of the load handler or can cause the truck to tip or slip, which in turn can lead to fatal injuries.

- ▶ Secure the raised load handler or truck such that no lowering, tipping or slipping is possible.
- ▶ The prescribed instructions must be followed when raising the truck – see page 73.
- ▶ When working on the parking brake: Secure the truck to prevent it rolling away accidentally (e.g. using chocks).

All necessary safety measures must be taken to avoid accidents when carrying out maintenance and repairs. The following preparations must be made:

Procedure

- Park the forklift truck securely – see page 125.
- A truck that is undergoing maintenance or repairs must be clearly marked as such.
- Secure the truck against unintentional activation.

5.2 Jacking up the truck

⚠ WARNING!

Risk of injury when lifting and jacking up the truck

When lifting and jacking up the truck, there is a risk of the truck unexpectedly tipping or slipping.

- ▶ Jack up the truck on level ground.
- ▶ Secure the truck against unintentional movement.
- ▶ Use a jack with sufficient capacity.
- ▶ When lifting the truck, secure the lifting accessories to the attachment points specially provided for this purpose – see page 219.
- ▶ When jacking up, use suitable means (chocks, wooden blocks) to prevent the truck from slipping or tipping.

Unsuitable lifting or support area

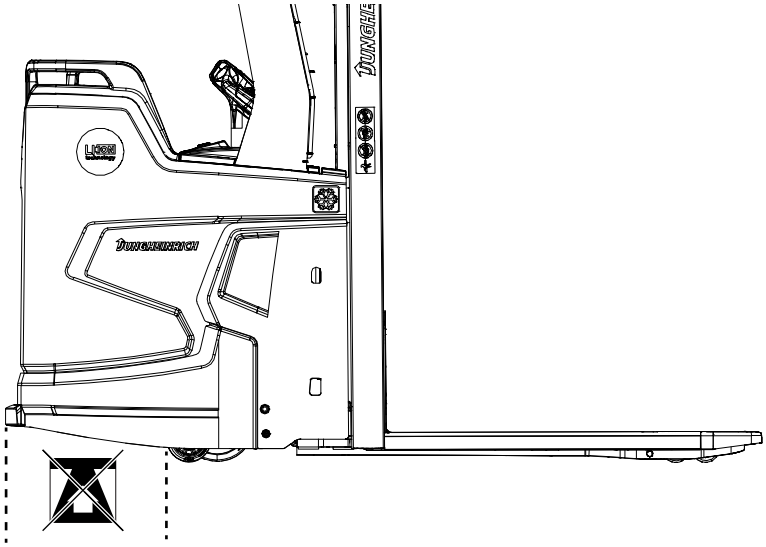

The drive frame of the truck is sloped backwards. The sloping area is not suitable for lifting or support as the truck could slip away.

5.2.1 Lifting and Jacking up with a Crane

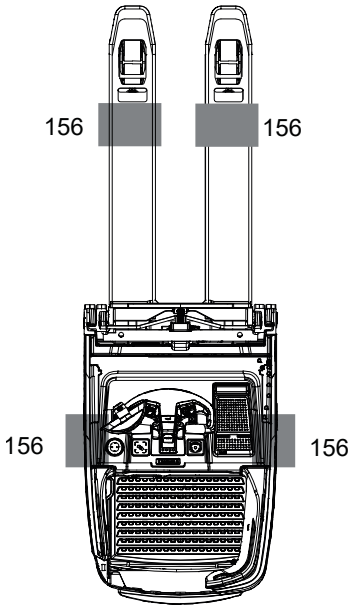

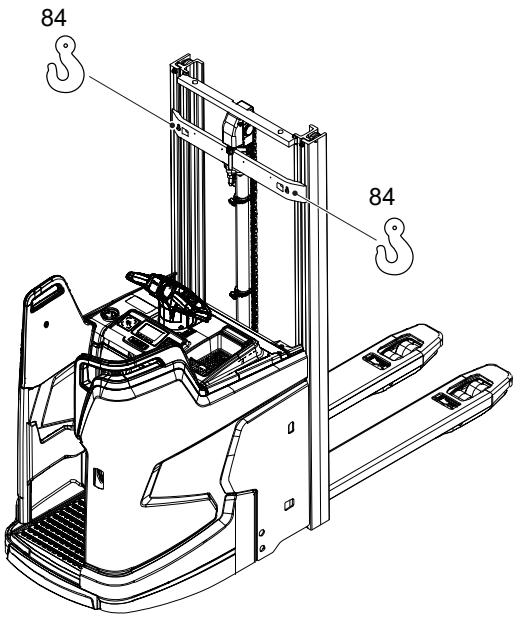

➔ Arrange the wooden blocks on the drive frame as far in the drive direction as possible to prevent the truck from tipping.

Lifting and jacking up the truck

Requirements

– Truck prepared for maintenance and repair work – see page 217.

Tools and Material Required

– Lifting equipment/crane lifting gear
– Wooden blocks

Procedure

- Apply the crane lifting gear to the attachment points (84).
- Raise the truck.
- Support the truck with wooden blocks (156).
- Lower the truck.
- Remove the crane lifting gear.

The truck is jacked up.

Lowering the truck

- To lower the truck, proceed in reverse order.

5.2.2 Lifting and Jacking up with a Jack

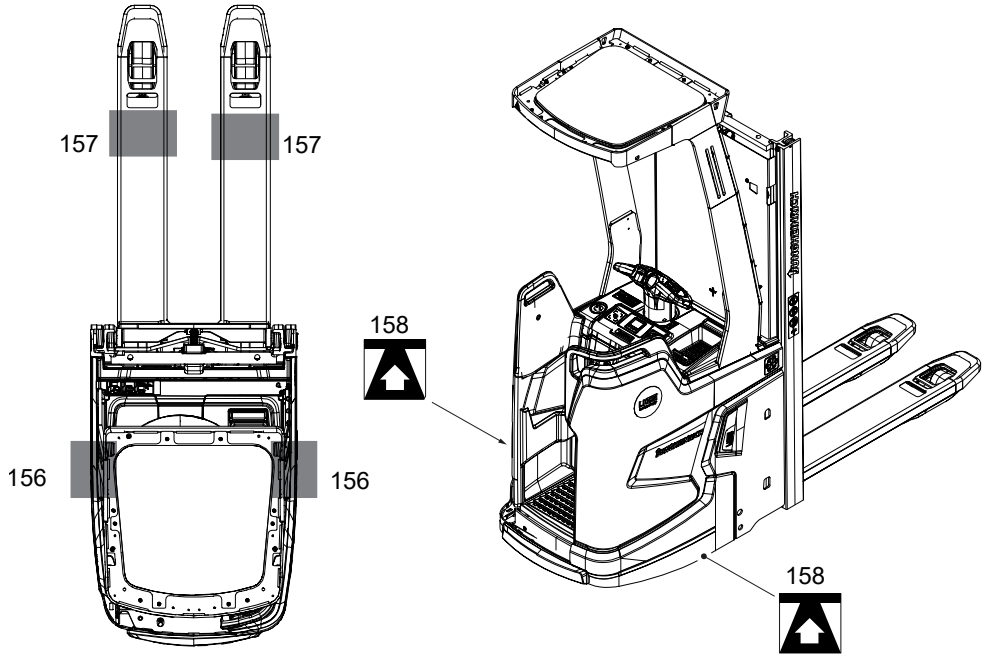

The symbol indicates the points at which the jack must be applied.

➔ When jacking up the truck with a jack, always jack up the support arms first to prevent the truck from rolling away.

➔ Arrange the wooden blocks on the drive frame as far in the drive direction as possible to prevent the truck from tipping.

Lifting and jacking up the truck

Tools and Material Required

– Jack (minimum capacity: 1 t)
– Wooden blocks

Procedure

- Switch on the truck.
- Jack up the support arms.
  - Raise the support arms with the support arm lift – see page 151.
  - Support the arms with support blocks (157).
  - Lower the support arms until they are resting securely.
- Switch off the truck.
- Jack up the drive frame.
  - Using a jack at a suitable lifting point (158) lift the drive frame one side at a time, first on the left and then on the right.
  - Support the drive frame with support blocks (156) on the left and right.

➔ Depending on the height of the wooden blocks, jacking must be done in two stages: If the truck is raised too far on one side, the jack can no longer be used on the opposite side.

- Lower and remove the jack.

The truck is jacked up.

Lowering the truck

- To lower the truck, proceed in reverse order.

5.3 Disassembling or assembling the front panel

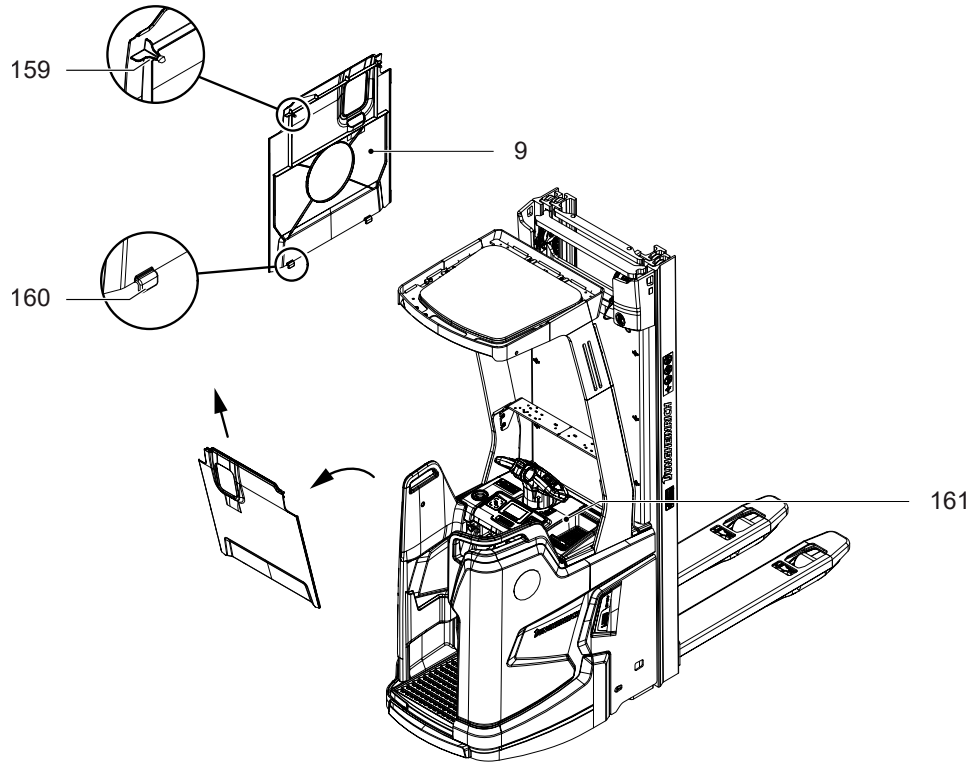

Front panel disassembly

Requirements

– Truck prepared for maintenance and repair work – see page 217.

Procedure

- Carefully raise the dashboard panel (161).
- Carefully remove the retaining lugs (159) on the front panel (9) from the rubber buffers on the truck chassis.
- Lift the front panel out of the retaining clips (160) and remove it.

Front panel removed.

5.4 Cleaning

5.4.1 Cleaning the truck

⚠ CAUTION!

Risk of fire due to use of flammable cleaning agents

Using flammable cleaning agents increases the risk of fire.

▶ Do not use any flammable cleaning agents when cleaning.

▶ Before cleaning, take necessary safety measures to prevent spark formation (e.g. due to short circuits).

NOTICE

Risk of component damage when cleaning the truck

Cleaning with a high-pressure cleaner can result in malfunctions due to humidity.

▶ Cover all electronic system assemblies (controls, sensors, motors etc.) before cleaning the truck with a high-pressure cleaner.

▶ Do not hold the jet of the high-pressure cleaner at marking points to avoid damaging them – see page 61.

▶ Do not clean the truck with a steam jet.

Cleaning tasks may only take place in the designated locations, which adhere to the stipulations of the country of use.

Requirements

– Truck prepared for maintenance and repair work – see page 217.

Tools and Material Required

– Water-based cleaning agents
– Sponge or cloth

Procedure

- Clean the surface of the truck with water-based solvents and water. Use a sponge or cloth to clean.
- In particular, clean the following areas:
  - Window(s)
  - Oil filler caps and their surroundings
  - Grease nipples (before lubrication)
- Dry the truck after cleaning, e.g. with compressed air or a dry cloth.
- Carry out all the tasks in the section "Recommissioning the truck after cleaning or maintenance work" – see page 230.

The truck is now clean.

5.4.2 Cleaning the electrical system assemblies

NOTICE

Risk of electrical-system damage

Cleaning the electronic system assemblies (controllers, sensors, motors etc.) with water can damage the electrical system.

▶ Do not clean the electrical system with water.

▶ Clean the electrical system with weak suction or compressed air (use a compressor with a water trap) and a non-conductive, anti-static brush.

Cleaning the electrical system assemblies

Requirements

– Truck prepared for maintenance and repair work – see page 217.

Tools and Material Required

– Compressor with water separator
– Non-conductive, antistatic brush

Procedure

- Expose the electrical system – see page 222.
- Clean the electrical system assemblies with weak suction or compressed air (use a compressor with a water separator) and a non-conductive, anti-static brush.
- Fit the electrical system cover – see page 222.
- Carry out all the tasks listed in the section "Recommissioning the truck after cleaning or maintenance work" – see page 230.

The electrical-system assemblies are now clean.

5.5 Checking the hydraulic oil level

NOTICE

If a leak is detected in the hydraulic system, the truck must be decommissioned and repaired by specialist personnel.

5.5.1 Performing the check

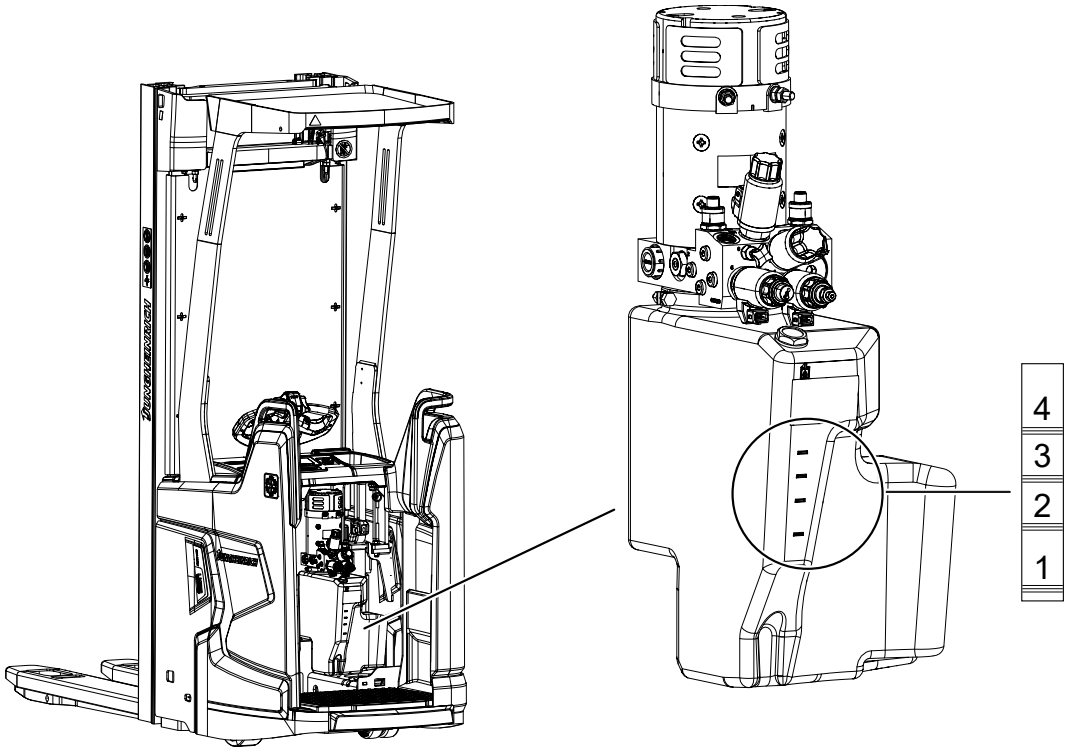

Marking	Volume
1	5 l
2	6,5 l
3	7,5 l
4	8,3 l

Checking the oil level

Requirements

– Load handler fully lowered – see page 147.
– Truck prepared for maintenance and repair work – see page 217.
– Front panel removed – see page 222.

Procedure

- Read off the hydraulic oil level at the markings on the hydraulic reservoir and compare with the set point.
- Top up the hydraulic oil if necessary – see page 215.

Oil level checked.

5.5.2 Hydraulic oil level setpoints

ERC 214i-216i, ERC 214bi-216bi

Mast type	Lift height	Volume marking
ZT	< 3600 mm	3
	≥ 3600 mm	4
DZ	< 6000 mm	4
	6000 mm	4

ERC 214zi-216zi

Mast type	Lift height	Volume marking
ZT	< 3600 mm	3
	≥ 3600 mm	4
DZ	< 6000 mm	4
	6000 mm	4

5.6 Checking the attachment and wear of the wheels

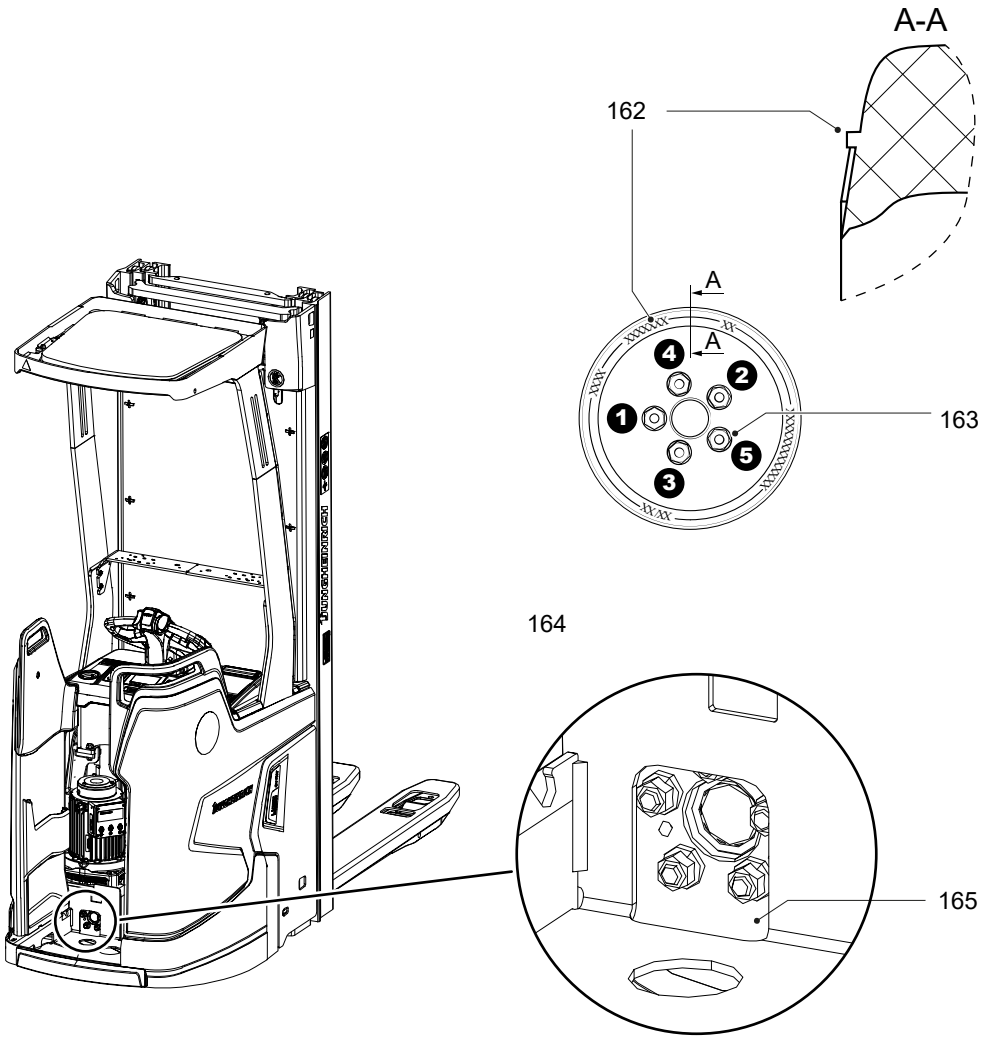

- ➔ Replace the wheels if the wear limit (162) has been reached.
- ➔ Early replacement of the drive wheel is required if it is heavily worn or brittle, or if there is insufficient traction.
- ➔ The wheel nuts on the drive wheel must be retightened in accordance with the maintenance intervals indicated in the maintenance checklist, see page 233.

Tightening the wheels nuts

Requirements

– Prepare the truck for maintenance and repair work, see page 217.

Tools and Material Required

– Torque wrench

Procedure

- Position the drive wheel (164) such that the wheel nuts (163) can be tightened through the assembly opening (165).
- Tighten all wheel nuts (163) using the torque wrench through the assembly opening (165) in the bumper.

  To do this, tighten the wheel nuts in the prescribed order.
  - First tighten with 10 Nm.
  - Then tighten with 150 Nm.

The wheel nuts have now been tightened.

➔ The drive wheel must only be replaced by authorised service personnel.

5.7 Checking the electrical fuses

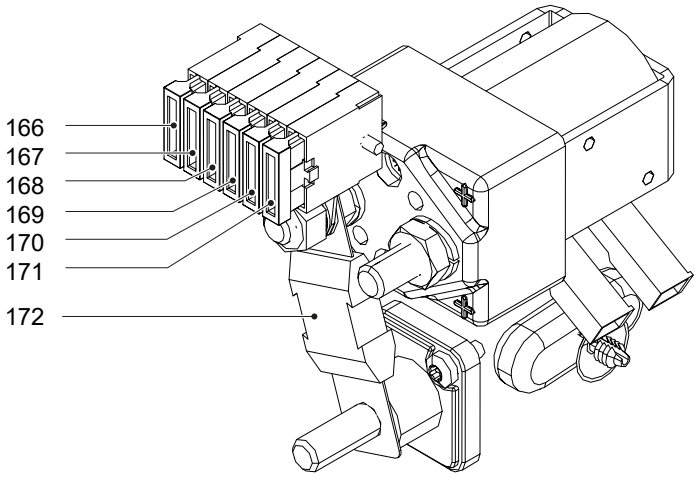

Item	Description	Protection	Rating (A)
166	4F9	– Horn – Key switch release to control – Radio data – Telematics box	4
167	F17	– Radio data	4
168	F18	– Electronic components	4
169	6F1	– Discharge indicator control fuse	2
170	9F17	– Electromechanical components	4
171	9F22	– Floor spot – Work lights – Brake	4
172	F50	– Main fuse	300

Checking fuses

Requirements

– Truck prepared for maintenance and repair work, see page 217.
– Front panel removed, see page 222.

Procedure

• Check the fuse ratings against the table and their condition, and replace if necessary.

The fuses have been checked.

5.8 Restoring the truck to service after maintenance and repairs

Procedure

- Thoroughly clean the truck, see page 223.
- Lubricate the truck according to the lubrication diagram, see page 216.
- Charge the battery, see page 88.
- Start up the truck, see page 119.

6 Decommissioning the Industrial Truck

NOTICE

Damage to the lithium-ion battery due to discharge

If the lithium-ion battery is not used for a long period of time, it can become damaged through discharge.

▶Fully charge the battery before extended downtimes.

▶To ensure a long service life of the lithium-ion battery, it must be fully charged every 4 weeks when not in use.

If the truck is to be out of service for more than a month, it must be stored in a frost-free and dry room. All necessary measures must be taken before, during and after decommissioning as described hereafter.

When the truck is out of service it must be jacked up so that all the wheels are clear of the ground. This is the only way of ensuring that the wheels and wheel bearings are not damaged.



Jack up the truck, see page 218.

If the truck is to be out of service for more than 6 months, agree further measures with the manufacturer's customer service department.

6.1 Prior to decommissioning

Procedure

- Thoroughly clean the truck – see page 223.
- Prevent the truck from rolling away accidentally.
- Check the hydraulic oil level and top up if necessary, see page 225.
- Apply a thin layer of oil or grease to any non-painted mechanical components.
- Lubricate the forklift truck according to the lubrication schedule – see page 216.
- Charge the battery – see page 79.

6.2 Action to be taken during decommissioning

- Charge the battery – see page 88.

6.3 Restoring the truck to service after decommissioning

Procedure

- Thoroughly clean the truck, see page 223.
- Lubricate the truck according to the lubrication diagram, see page 216.

- Charge the battery, see page 88.
- Start up the truck, see page 119.

7 Safety tests to be performed at intervals and after unusual incidents

The truck must be inspected at least annually (refer to national regulations) or after any unusual event by a qualified inspector. The manufacturer offers a safety inspection service which is performed by personnel specifically trained for this purpose.

A complete test must be carried out on the technical condition of the truck with regard to safety. The truck must also be examined thoroughly for damage.

The operating company is responsible for ensuring that faults are rectified immediately.

8 Final de-commissioning, disposal

➔ Final de-commissioning or disposal of the truck in must be performed in accordance with the regulations of the country of use. In particular, regulations governing the disposal of batteries, consumables and electronic and electrical systems must be observed.

The truck must only be disassembled by trained personnel in accordance with the procedures as specified by the manufacturer.

9 Human vibration measurement

➔ Vibrations that affect the operator over the course of the day are known as human vibrations. Excessive human vibrations will cause the operator long term health problems. The European "2002/44/EC/Vibration" operator directive has therefore been established to protect operators. To help operators to assess the application situation, the manufacturer offers a service of measuring these human vibrations.

G Maintenance, Inspection and Changing of Maintenance Parts Requiring Replacement

⚠ WARNING!

Lack of maintenance can result in accidents

Failure to perform regular maintenance and inspections can lead to truck failure and poses a potential hazard to personnel and equipment.

▶ Thorough and professionally carried out maintenance and inspection is one of the most important conditions for the safe use of the truck.

NOTICE

The application conditions of a truck have a considerable impact on component wear. The following service, inspection and replacement intervals are based on single-shift operation under normal operating conditions. The intervals must be reduced accordingly if the equipment is to be used in very dusty conditions, sharp temperature fluctuations or multiple shifts.

▶ To prevent damage due to wear, the manufacturer recommends an on-site application analysis to agree on appropriate intervals.

The following chapter defines the tasks to be performed, the respective intervals to be observed and the maintenance parts for which replacement is recommended.

1 Maintenance Contents ERCz 214i 216i

Issued on: 2024-05-24 16:00

1.1 Owner

To be performed every 50 service hours, but at least once a week.

1.1.1 Maintenance contents

1.1.1.1 Standard equipment

Brakes
Test the brake.

Electrics
Check the function of the emergency disconnect switch

Hydraulic operations
Clean the sensors.
Lubricate the load chains.
Correct the hydraulic-oil level.

Steering
Test the tiller return function.

1.1.2 Inspection contents

1.1.2.1 Standard equipment

The following points must be checked:

Electrical system
Warning and safety equipment in accordance with the operating instructions
Functionality of display and controls
Test emergency disconnect switch and check for damage

Power supply
charge socket for functionality and damage.

Travel
Check wheels for wear and damage

Chassis/structure
Industrial truck for damage and leaks
Check labels for legibility, completeness and plausibility
Check doors or covers for damage
Protective screen panel or protective grille for damage

Hydraulic operations
Test hydraulic system
Check fork arms or load handler for wear and damage

1.1.2.2 Optional Equipment

The following points must be checked:

Standard on-board charger

Battery charger
Mains plug and mains cable for damage

Strobe light/warning beacon

Electrical system
Test strobe light/warning beacon and check for damage

Overhead guard

Chassis/structure
Check the overhead guard and/or the driver's cab for secure attachment and damage

1.2 Customer Service

In accordance with the ERCz 214i 216i service interval, to be performed every 1000 service hours, but at least once a year.

1.2.1 Maintenance contents

1.2.1.1 Standard equipment

Electrical system
Test the contactors and/or relays.
Check the function of the emergency disconnect switch
Clean the fan.
Perform insulation inspection.
Clean the motor with compressed air.

Power supply
Measure the battery voltage.

Chassis/structure
Test the function and automatic return function of the operator platform.
Check that the panels and covers as well as mounting brackets are secure. Ensure they function correctly and are safe.

Hydraulic operations
Test the sensors.
Clean the sensors.
Adjust the load chains.
Lubricate the load chains.
Test emergency lowering.
Correct the hydraulic-oil level.
Test the pressure relief valve.

Agreed services
Carry out a test run with the rated capacity or a customer-specific load.
Lubricate the truck according to the lubrication schedule.
Demonstration after maintenance.

Steering
Test the tiller return function.
Test straight-ahead travel.

1.2.1.2 Optional Equipment

Standard on-board charger

Battery charger
Test the immobiliser on trucks with an on-board charger.
Carry out a potential measurement on the chassis while charging is in progress.

Rack height select

System components
Test rack height select.

Radio data

System components
Clean the scanner and terminal.

Weigher sensors/switches

Electrical system
Test the weigher.

Lead-acid battery, international

Electrical system
Perform insulation inspection.

Lead-acid battery

Electrical system
Perform insulation inspection.

1.2.2 Inspection contents

The following points must be checked:

1.2.2.1 Standard equipment

Electrical system
Cables and motor for secure fit and damage
Warning and safety equipment in accordance with the operating instructions
Functionality of display and controls
Sensors for secure attachment, function and damage
Test emergency disconnect switch and check for damage
Contactors and/or relays for wear and damage
Test fan and check for damage
Check electrical wiring for damage (insulation damage, connections) and check whether the fuse ratings are correct
Check carbon brushes for wear

Power supply
Battery latch and battery attachment for correct function and damage
charge socket for functionality and damage.

Travel
Deadman switch for function and damage
Drive system bearings for wear and damage
Transmission for noise and leaks
Check wheels for wear, damage and secure mounting
Check wheel bearings and mounting of wheels for wear and damage

Chassis/structure
Industrial truck for damage and leaks
Check chassis connections and screw connections are securely attached and check for damage
Check labels for legibility, completeness and plausibility
Operator platform for damage
Check mast is securely attached
Protective screen panel or protective grille for damage

Hydraulic operations
Test hydraulic controls and check their labels for legibility, completeness and plausibility
Sensors for secure fit and damage
Check cylinders and piston rods are securely attached and check for damage
Check lateral play of the mast sections and fork carriage
Check load chain mounting elements and chain pins for wear and damage
Check mast rollers and their running surfaces for wear and damage
Test hydraulic system
Check fork arms or load handler for wear and damage
Tie/plunger rods are uniformly adjusted and for wear and damage
Check the hoses, pipes and connections are securely attached and check for wear, leaks, damage, blisters and kinks

Steering
Tiller for lateral play
Electric steering and its components for function, wear and damage
Check the mechanical parts of the steering column for wear and damage

1.2.2.2 Optional Equipment

Standard on-board charger

Battery charger
Mains plug and mains cable for damage
Cables and electrical connections for secure fit and damage

Working platform

Hydraulic operations
Check the attachment is securely attached to the truck and check the load-bearing components for secure fit and damage

Shock sensor/data recorder

Electrical system
Check shock sensor/data recorder is securely attached and check for damage

Radio data

System components
Scanner and terminal for secure fit, functionality and damage
Fuses for correct ratings
Check cables are securely attached and check for damage

Weigher sensors/switches

Electrical system
Weigher for damage

Access module

Electrical system
Check access module is securely attached, test and check for damage

Optional controls

Electrical system
Ensure optional controls are present and plausible

Strobe light/warning beacon

Electrical system
Test strobe light/warning beacon and check for damage

Overhead guard

Chassis/structure
Check the overhead guard and/or the driver's cab for secure attachment and damage

Piston rod sensor in free lift

Electrical system
Sensors for secure attachment, function and damage

System components
Check cables are securely attached and check for damage

Pre-Op_Check

Electrical system
Check access module is securely attached, test and check for damage

1.2.3 Maintenance parts

The manufacturer recommends the replacement of the following maintenance parts at the specified intervals.

1.2.3.1 Standard equipment

maintenance part	service hours	months
Gear oil	10000	
Hydraulic system breather filter	2000	12
Hydraulic oil	2000	12
Hydraulic oil filter	2000	12

1.2.3.2 Optional Equipment

Cold store application

maintenance part	service hours	months
Hydraulic oil	1000	12
Hydraulic oil additive	1000	12

2 Maintenance Contents ERC 214/216i

Issued on: 2024-05-24 16:00

2.1 Owner

To be performed every 50 service hours, but at least once a week.

2.1.1 Maintenance contents

2.1.1.1 Standard equipment

Brakes
Test the brake.

Electrics
Check the function of the emergency disconnect switch

Hydraulic operations
Clean the sensors.
Lubricate the load chains.
Correct the hydraulic-oil level.

Steering
Test the tiller return function.

2.1.2 Inspection contents

2.1.2.1 Standard equipment

The following points must be checked:

Electrical system
Warning and safety equipment in accordance with the operating instructions
Functionality of display and controls
Test emergency disconnect switch and check for damage

Power supply
charge socket for functionality and damage.

Travel
Check wheels for wear and damage

Chassis/structure
Industrial truck for damage and leaks
Check labels for legibility, completeness and plausibility
Check doors or covers for damage
Protective screen panel or protective grille for damage

Hydraulic operations
Test hydraulic system
Check fork arms or load handler for wear and damage

2.1.2.2 Optional Equipment

The following points must be checked:

Standard on-board charger

Battery charger
Mains plug and mains cable for damage

Strobe light/warning beacon

Electrical system
Test strobe light/warning beacon and check for damage

Overhead guard

Chassis/structure
Check the overhead guard and/or the driver's cab for secure attachment and damage

2.2 Customer Service

In accordance with the ERC 214/216i service interval, to be performed every 1000 service hours, but at least once a year.

2.2.1 Maintenance contents

2.2.1.1 Standard equipment

Electrical system
Test the contactors and/or relays.
Check the function of the emergency disconnect switch
Clean the fan.
Perform insulation inspection.
Clean the motor with compressed air.

Power supply
Measure the battery voltage.

Chassis/structure
Test the function and automatic return function of the operator platform.
Check that the panels and covers as well as mounting brackets are secure. Ensure they function correctly and are safe.

Hydraulic operations
Test the sensors.
Clean the sensors.
Adjust the load chains.
Lubricate the load chains.
Test emergency lowering.
Correct the hydraulic-oil level.
Test the pressure relief valve.

Agreed services
Carry out a test run with the rated capacity or a customer-specific load.
Lubricate the truck according to the lubrication schedule.
Demonstration after maintenance.

Steering
Test the tiller return function.
Test straight-ahead travel.

2.2.1.2 Optional Equipment

Standard on-board charger

Battery charger
Test the immobiliser on trucks with an on-board charger.
Carry out a potential measurement on the chassis while charging is in progress.

Rack height select

System components
Test rack height select.

Radio data

System components
Clean the scanner and terminal.

Weigher sensors/switches

Electrical system
Test the weigher.

2.2.2 Inspection contents

The following points must be checked:

2.2.2.1 Standard equipment

Electrical system
Cables and motor for secure fit and damage
Warning and safety equipment in accordance with the operating instructions
Functionality of display and controls
Sensors for secure attachment, function and damage
Test emergency disconnect switch and check for damage
Contactors and/or relays for wear and damage
Test fan and check for damage
Check electrical wiring for damage (insulation damage, connections) and check whether the fuse ratings are correct
Check carbon brushes for wear

Power supply
Battery latch and battery attachment for correct function and damage
charge socket for functionality and damage.

Travel
Deadman switch for function and damage
Drive system bearings for wear and damage
Transmission for noise and leaks
Check wheels for wear, damage and secure mounting
Check wheel bearings and mounting of wheels for wear and damage
Hydraulic support wheel for correct function and leaks

Chassis/structure
Industrial truck for damage and leaks
Check chassis connections and screw connections are securely attached and check for damage
Check labels for legibility, completeness and plausibility
Operator platform for damage
Check mast is securely attached
Protective screen panel or protective grille for damage

Hydraulic operations
Test hydraulic controls and check their labels for legibility, completeness and plausibility
Sensors for secure fit and damage
Check cylinders and piston rods are securely attached and check for damage
Check lateral play of the mast sections and fork carriage
Check load chain mounting elements and chain pins for wear and damage
Check mast rollers and their running surfaces for wear and damage
Test hydraulic system
Check fork arms or load handler for wear and damage
Check the hoses, pipes and connections are securely attached and check for wear, leaks, damage, blisters and kinks

Steering
Tiller for lateral play
Electric steering and its components for function, wear and damage
Check the mechanical parts of the steering column for wear and damage

2.2.2.2 Optional Equipment

Standard on-board charger

Battery charger
Mains plug and mains cable for damage
Cables and electrical connections for secure fit and damage

Working platform

Hydraulic operations
Check the attachment is securely attached to the truck and check the load-bearing components for secure fit and damage

Shock sensor/data recorder

Electrical system
Check shock sensor/data recorder is securely attached and check for damage

Radio data

System components
Scanner and terminal for secure fit, functionality and damage
Fuses for correct ratings
Check cables are securely attached and check for damage

Weigher sensors/switches

Electrical system
Weigher for damage

Access module

Electrical system
Check access module is securely attached, test and check for damage

Optional controls

Electrical system
Ensure optional controls are present and plausible

Strobe light/warning beacon

Electrical system
Test strobe light/warning beacon and check for damage

Overhead guard

Chassis/structure
Check the overhead guard and/or the driver's cab for secure attachment and damage

Piston rod sensor in free lift

Electrical system
Sensors for secure attachment, function and damage

System components
Check cables are securely attached and check for damage

Pre-Op_Check

Electrical system
Check access module is securely attached, test and check for damage

2.2.3 Maintenance parts

The manufacturer recommends the replacement of the following maintenance parts at the specified intervals.

2.2.3.1 Standard equipment

maintenance part	service hours	months
Gear oil	10000	
Hydraulic system breather filter	2000	12
Hydraulic oil	2000	12
Hydraulic oil filter	2000	12

2.2.3.2 Optional Equipment

Cold store application

maintenance part	service hours	months
Hydraulic oil	1000	12
Hydraulic oil additive	1000	12

3 Maintenance Contents ERC 214/216 bi

Issued on: 2024-05-24 16:00

3.1 Owner

To be performed every 50 service hours, but at least once a week.

3.1.1 Maintenance contents

3.1.1.1 Standard equipment

Brakes
Test the brake.

Electrics
Check the function of the emergency disconnect switch

Hydraulic operations
Clean the sensors.
Lubricate the load chains.
Correct the hydraulic-oil level.

Steering
Test the tiller return function.

3.1.2 Inspection contents

3.1.2.1 Standard equipment

The following points must be checked:

Electrical system
Warning and safety equipment in accordance with the operating instructions
Functionality of display and controls
Test emergency disconnect switch and check for damage

Power supply
charge socket for functionality and damage.

Travel
Check wheels for wear and damage

Chassis/structure
Industrial truck for damage and leaks
Check labels for legibility, completeness and plausibility
Check doors or covers for damage
Protective screen panel or protective grille for damage

Hydraulic operations
Test hydraulic system
Check fork arms or load handler for wear and damage

3.1.2.2 Optional Equipment

The following points must be checked:

Standard on-board charger

Battery charger
Mains plug and mains cable for damage

Strobe light/warning beacon

Electrical system
Test strobe light/warning beacon and check for damage

Overhead guard

Chassis/structure
Check the overhead guard and/or the driver's cab for secure attachment and damage

3.2 Customer Service

In accordance with the ERC 214/216 bi service interval, to be performed every 1000 service hours, but at least once a year.

3.2.1 Maintenance contents

3.2.1.1 Standard equipment

Electrical system
Test the contactors and/or relays.
Check the function of the emergency disconnect switch
Clean the fan.
Perform insulation inspection.
Clean the motor with compressed air.

Power supply
Measure the battery voltage.

Chassis/structure
Test the function and automatic return function of the operator platform.
Check that the panels and covers as well as mounting brackets are secure. Ensure they function correctly and are safe.

Hydraulic operations
Test the sensors.
Clean the sensors.
Adjust the load chains.
Lubricate the load chains.
Test emergency lowering.
Correct the hydraulic-oil level.
Test the pressure relief valve.

Agreed services
Carry out a test run with the rated capacity or a customer-specific load.
Lubricate the truck according to the lubrication schedule.
Demonstration after maintenance.

Steering
Test the tiller return function.
Test straight-ahead travel.

3.2.1.2 Optional Equipment

Standard on-board charger

Battery charger
Test the immobiliser on trucks with an on-board charger.
Carry out a potential measurement on the chassis while charging is in progress.

Rack height select

System components
Test rack height select.

Radio data

System components
Clean the scanner and terminal.

Weigher sensors/switches

Electrical system
Test the weigher.

3.2.2 Inspection contents

The following points must be checked:

3.2.2.1 Standard equipment

Electrical system
Cables and motor for secure fit and damage
Warning and safety equipment in accordance with the operating instructions
Functionality of display and controls
Sensors for secure attachment, function and damage
Test emergency disconnect switch and check for damage
Contactors and/or relays for wear and damage
Test fan and check for damage
Check electrical wiring for damage (insulation damage, connections) and check whether the fuse ratings are correct
Check carbon brushes for wear

Power supply
Battery latch and battery attachment for correct function and damage
charge socket for functionality and damage.

Travel
Deadman switch for function and damage
Drive system bearings for wear and damage
Transmission for noise and leaks
Check wheels for wear, damage and secure mounting
Check wheel bearings and mounting of wheels for wear and damage
Hydraulic support wheel for correct function and leaks

Chassis/structure
Industrial truck for damage and leaks
Check chassis connections and screw connections are securely attached and check for damage
Check labels for legibility, completeness and plausibility
Operator platform for damage
Check mast is securely attached
Protective screen panel or protective grille for damage

Hydraulic operations
Test hydraulic controls and check their labels for legibility, completeness and plausibility
Sensors for secure fit and damage
Check cylinders and piston rods are securely attached and check for damage
Check lateral play of the mast sections and fork carriage
Check load chain mounting elements and chain pins for wear and damage
Check mast rollers and their running surfaces for wear and damage
Test hydraulic system
Check fork arms or load handler for wear and damage
Check the hoses, pipes and connections are securely attached and check for wear, leaks, damage, blisters and kinks

Steering
Tiller for lateral play
Electric steering and its components for function, wear and damage
Check the mechanical parts of the steering column for wear and damage

3.2.2.2 Optional Equipment

Standard on-board charger

Battery charger
Mains plug and mains cable for damage
Cables and electrical connections for secure fit and damage

Working platform

Hydraulic operations
Check the attachment is securely attached to the truck and check the load-bearing components for secure fit and damage

Shock sensor/data recorder

Electrical system
Check shock sensor/data recorder is securely attached and check for damage

Radio data

System components
Scanner and terminal for secure fit, functionality and damage
Fuses for correct ratings
Check cables are securely attached and check for damage

Weigher sensors/switches

Electrical system
Weigher for damage

Access module

Electrical system
Check access module is securely attached, test and check for damage

Optional controls

Electrical system
Ensure optional controls are present and plausible

Strobe light/warning beacon

Electrical system
Test strobe light/warning beacon and check for damage

Overhead guard

Chassis/structure
Check the overhead guard and/or the driver's cab for secure attachment and damage

Piston rod sensor in free lift

Electrical system
Sensors for secure attachment, function and damage

System components
Check cables are securely attached and check for damage

Pre-Op_Check

Electrical system
Check access module is securely attached, test and check for damage

3.2.3 Maintenance parts

The manufacturer recommends the replacement of the following maintenance parts at the specified intervals.

3.2.3.1 Standard equipment

maintenance part	service hours	months
Gear oil	10000	
Hydraulic system breather filter	2000	12
Hydraulic oil	2000	12
Hydraulic oil filter	2000	12

3.2.3.2 Optional Equipment

Cold store application

maintenance part	service hours	months
Hydraulic oil	1000	12
Hydraulic oil additive	1000	12