EZS 130

05.19

Operating instructions

en-GB

51808265

08.25

EZS 130

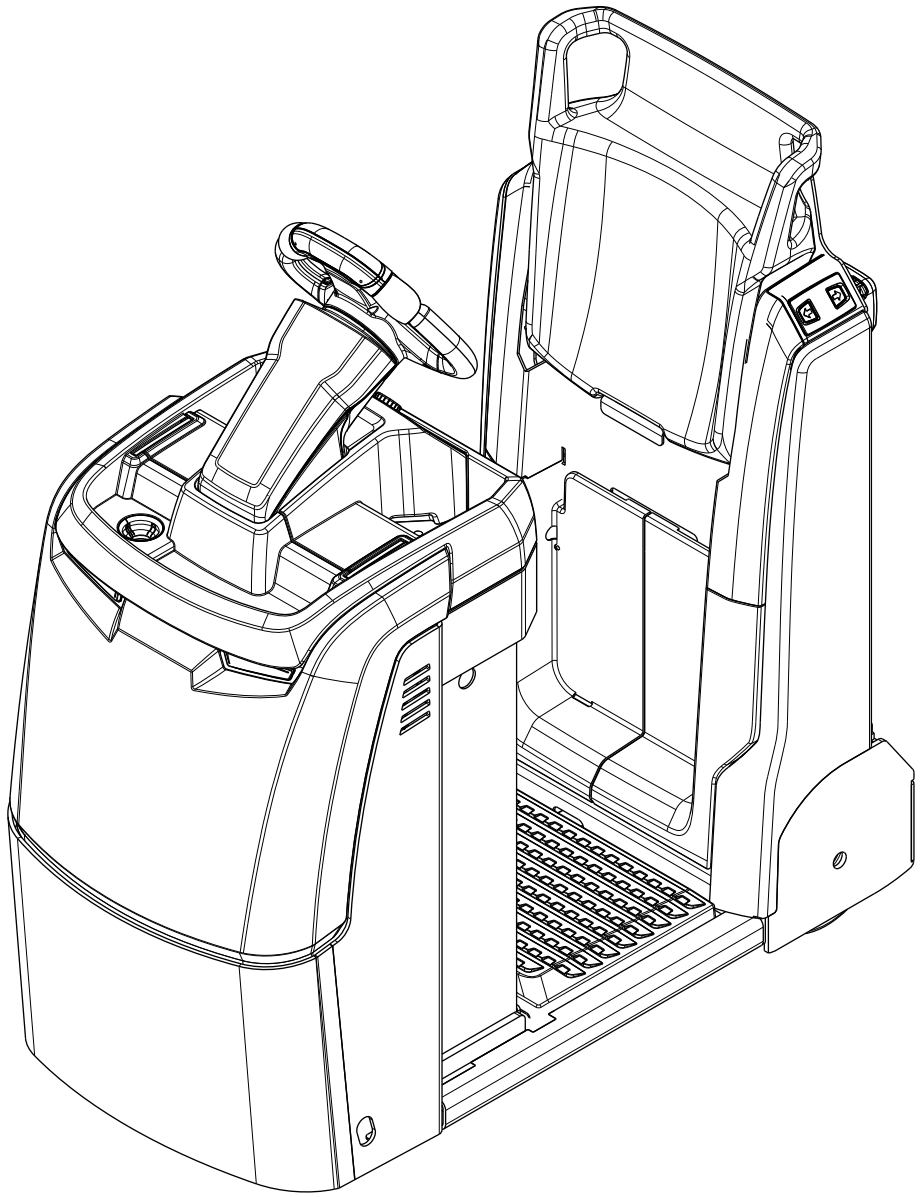

JUNGHEINRICH

Declaration of Conformity

CE

Manufacturer

Jungheinrich AG, 22039 Hamburg, Germany

Description
Industrial truck

Type	Option	Serial no.	Year of manufacture
EZS 130			

On behalf of

Date

EU DECLARATION OF CONFORMITY

The undersigned hereby declare that the powered truck described in detail complies with the current versions of European Directives 2006/42/EG (Machinery Directive) and 2014/30/EU (Electromagnetic Compatibility - EMC). The manufacturer is authorised to compile the technical file.

08.25 en-GB

UK CA

JUNGHEINRICH

Declaration of Conformity (○)

Product:	EZS 130 Serial number/type number
Manufacturer:	Jungheinrich Aktiengesellschaft 22039 Hamburg, Germany
UK representative:	Jungheinrich UK Ltd Sherbourne House Sherbourne Drive Tilbrook Milton Keynes MK7 8HX

Authorised to compile documentation:

The manufacturer is authorised to compile the technical documentation and its representative is authorised to make documentation available upon reasoned request for a period of at least 10 years from the date of first placement of the product on the UK market.

The manufacturer bears sole responsibility for issuance of this Declaration of Conformity.

The subject of the Declaration as outlined above satisfies the applicable UK legislation:

Supply of Machinery (Safety) Regulations 2008 No. 1597

and

Electromagnetic Compatibility Regulations 2016 No. 1091

Signed for and on behalf of:

Jungheinrich Aktiengesellschaft

08.25 en-GB

Foreword

Notes on the operating instructions

The present ORIGINAL OPERATING INSTRUCTIONS are designed to provide sufficient instruction for the safe operation of the industrial truck. The information is provided clearly and concisely. The chapters are arranged by letter and the pages are numbered continuously.

The operator manual details different industrial truck models. When operating and servicing the industrial truck, make sure that the particular section applies to your truck model.

Our trucks are subject to ongoing development. We reserve the right to alter the design, equipment and technical features of the system. No guarantee of particular features of the truck should therefore be assumed from the present operating instructions.

Safety notices and text mark-ups

Safety instructions and important explanations are indicated by the following graphics:

⚠ DANGER!

Indicates an extremely hazardous situation. Failure to comply with this instruction will result in severe irreparable injury and even death.

⚠ WARNING!

Indicates an extremely hazardous situation. Failure to comply with this instruction may result in severe irreparable injury and even death.

⚠ CAUTION!

Indicates a hazardous situation. Failure to comply with this instruction may result in slight to medium injury.

NOTICE

Indicates a material hazard. Failure to comply with this instruction may result in material damage.

➔ Used before notices and explanations.

●	Indicates standard equipment
○	Indicates optional equipment

Copyright

Copyright of these operating instructions remains with JUNGHEINRICH AG.

Jungheinrich Aktiengesellschaft

Friedrich-Ebert-Damm 129
22047 Hamburg - Germany

Tel: +49 (0) 40/6948-0

www.jungheinrich.com

08.25 en-GB

Contents

A Correct Use and Application 11

1 General 11
2 Correct application 11
3 Approved application conditions 12
3.1 Permissible Operating Conditions for Trucks with Lithium-Ion Batteries 13
4 Proprietor responsibilities 14
5 Adding attachments and/or optional equipment 14

B Truck Description 15

1 Application 15
2 Travel direction definition 15
3 Assemblies and Functional Description 16
3.1 Assembly Overview 16
3.2 Functional Description 18
4 Technical Specifications 21
4.1 Performance data 21
4.2 Dimensions 22
4.3 Weights 23
4.4 Tyre type 23
4.5 EN norms 24
4.6 Specifications according to RED guideline (Radio Equipment Directive) for radio units 25
4.7 Electrical Requirements 25
4.8 Power supply of on-board charger (○) 25
4.9 Conditions of use 25
5 Identification Points and Data Plates 26
5.1 Data plate 27

C Transport and Commissioning 29

1 Lifting by crane 29
2 Transport 30
3 Using the Truck for the First Time 31

D Battery - Servicing, Recharging, Replacement 33

1 Replaceable lead-acid and lithium-ion batteries 33
1.1 Notes on Battery Technologies 33
2 Safety instructions for handling lead-acid batteries 33
2.1 General notes on handling batteries 35
3 Integrated Modular Lithium-Ion Battery 35
3.1 Notes on Lithium-Ion Batteries 35
3.2 Safety regulations for handling lithium-ion batteries 36
3.3 Battery types 44
3.4 Battery data plate 45
3.5 Usability depending on the battery cell temperature 48
3.6 Exposing the battery 48
3.7 Charging the battery 49
4 Battery types 54

5 Charging the battery ... 55
5.1 Charging the battery with a stationary battery charger ... 56
5.2 Charging the battery with the integrated charger (○) ... 57
6 Charge Status Indicator ... 61
7 Removing or installing the battery ... 62

E Operation ... 65

1 Safety Regulations for the Operation of Forklift Trucks ... 65
2 Displays and Controls ... 67
2.1 Battery discharge indicator ... 71
2.2 Battery discharge monitor ... 71
3 Starting up the truck ... 72
3.1 Checks and Operations to Be Performed Before Starting Daily Work ... 72
3.2 Preparing the truck for operation ... 73
3.3 Visual inspections and activities to be performed after establishing operational readiness ... 74
3.4 Parking the truck securely ... 75
4 Working with the truck ... 76
4.1 Safety regulations for travel mode ... 76
4.2 Emergency Disconnect ... 80
4.3 How to act in hazardous situations ... 82
4.4 Brakes ... 82
4.5 Travel ... 85
4.6 Operator platform ... 88
4.7 Steering ... 89
4.8 Pedestrian mode (○) ... 90
4.9 Travelling with trailers ... 92
5 Troubleshooting ... 93
5.1 Truck does not start ... 94
5.2 Truck does not move - with electrical trailer interface ... 95
5.3 Truck operates only in slow travel in rider mode ... 96
5.4 Truck brakes in touch mode and does not continue to travel ... 96
5.5 Lithium-ion battery fault ... 97
6 Moving a truck without its own drive system ... 99
7 Optional Equipment ... 101
7.1 Display unit (2 inch display) ... 101
7.2 Keyless Access System ... 108
7.3 General Information about the Use of Keyless Access Systems ... 109
7.4 Commissioning the keypad and the transponder reader ... 109
7.5 Using the Display: ... 112
7.6 Using the Keypad ... 117
7.7 Operating the transponder reader ... 122
7.8 Coupling Types ... 126
7.9 Interface between Tow Tractor and Trailer ... 131
7.10 Tugger Train ... 137
7.11 Recovery function with electrical interface ... 142
7.12 ISM access module (○) ... 142
7.13 Floor-Spot (○) ... 143

F Truck maintenance ... 145

1 Spare Parts ... 145
2 Operational Safety and Environmental Protection ... 145

3 Maintenance Safety Regulations ... 147
3.1 Working on the electrical system ... 148
3.2 Consumables and used parts ... 148
3.3 Wheels ... 148
4 Lubricants and Lubrication Schedule ... 149
4.1 Handling consumables safely ... 149
4.2 Lubrication Schedule ... 151
4.3 Consumables ... 152
5 Maintenance and repairs ... 153
5.1 Preparing the truck for maintenance and repair work ... 153
5.2 Lifting and jacking up the truck safely ... 154
5.3 Cleaning ... 155
5.4 Replacing the wheels ... 157
5.5 Tightening the wheel nuts ... 158
5.6 Disassembling or assembling the front panel ... 159
5.7 Checking the electrical fuses ... 160
5.8 Restoring the truck to service after maintenance and repairs ... 161
6 Decommissioning the Industrial Truck ... 162
6.1 Prior to decommissioning ... 162
6.2 Action to be taken during decommissioning ... 163
6.3 Restoring the truck to service after decommissioning ... 164
7 Safety tests to be performed at intervals and after unusual incidents ... 165
8 Final de-commissioning, disposal ... 165
9 Human vibration measurement ... 165

G Maintenance, Inspection and Changing of Maintenance Parts Requiring Replacement ... 167

1 Maintenance Contents EZS 130 ... 167
1.1 Owner ... 167
1.2 Customer Service ... 171

A Correct Use and Application

1 General

The truck must be used, operated and serviced in accordance with these operating instructions. All other types of use are beyond its scope of application and may result in damage to persons, material assets and/or the truck.

2 Correct application

NOTICE

The maximum tow load is shown on the data plate and must not be exceeded.

The load must be coupled to a trailer coupling or an attachment approved by the manufacturer.

– Towing loads.
– Do not carry passengers.
– Loads can only be pushed with the trailer coupling.

3 Approved application conditions

– Operation in industrial and commercial environments.
– Permissible temperature range 5°C to 40°C.
– Operation only on secure, level surfaces with sufficient capacity.
– Do not exceed the permissible surface and point load limits on the travel routes.
– Operation only on travel paths that are visible and approved by the operating company.
– Negotiating inclines up to a maximum of 15 %.
– Do not travel across or at an angle on inclines. Travel with the load facing uphill.

⚠ WARNING!

Use under extreme conditions

Using the truck under extreme conditions can result in malfunctions and accidents.

▶ Special equipment and authorisation are required if the truck is to be constantly used in extreme conditions, especially in dusty or corrosive atmospheres.

▶ The truck cannot be used in areas at risk of explosion.

▶ In adverse weather conditions (thunder, lightning) the industrial truck must not be operated outside or in endangered areas.

Lithium-ion batteries

If equipped with a lithium-ion battery (○), the permissible operating conditions of the truck may change see page 13.

The permissible operating conditions can vary based on optional equipment components.

3.1 Permissible Operating Conditions for Trucks with Lithium-Ion Batteries

Replaceable lithium-ion batteries

If equipped with a lithium-ion battery (○), the permissible operating conditions change; see the "Lithium-ion battery 24V - 200 Ah. operating instructions"

Integrated modular lithium-ion batteries

The battery is not authorised for use in cold stores with temperatures below -10 °C.

- Permissible temperature range -10 °C to +40 °C.
- Secure parking (longer than 5 minutes) is only permissible at +5 °C to +40 °C.
- Maximum air humidity 95% non-condensing.
- The application areas can be changed, but in general this should be minimised due to thawing and possible corrosion.
- Thawing is permissible only if the truck can be subsequently dried thoroughly.
- Do not charge the battery below +5 °C.

4 Proprietor responsibilities

For the purposes of the present operating instructions the “operating company” is defined as any natural or legal person who either uses the industrial truck himself, or on whose behalf it is used. In special cases (e.g. leasing or renting) the proprietor is considered the person who, in accordance with existing contractual agreements between the owner and user of the industrial truck, is charged with operational duties.
The proprietor must ensure that the industrial truck is used only for the purpose it is intended for and that danger to life and limb of the user and third parties are excluded. Furthermore, accident prevention regulations, safety regulations and operating, servicing and repair guidelines must be followed. The operating company must ensure that all users have read and understood these operating instructions.

NOTICE

Failure to comply with the operating instructions invalidates the warranty. The same applies if improper work is carried out on the truck by the customer or third parties without the permission of the manufacturer.

5 Adding attachments and/or optional equipment

The mounting or installation of additional equipment which affects or enhances the performance of the industrial truck requires the written permission of the manufacturer. Local authority approval may also need to be obtained.
Local authority approval however does not constitute the manufacturer’s approval.

B Truck Description

1 Application

The truck is a three-wheel electric tow tractor with an operator platform, equipped with a JetPilot. It is designed for transporting goods on level surfaces in buildings.

The truck is not authorised for use on public highways.

The drawbar pull is indicated on the data plate.

2 Travel direction definition

The following determinations have been made for travel direction specification:

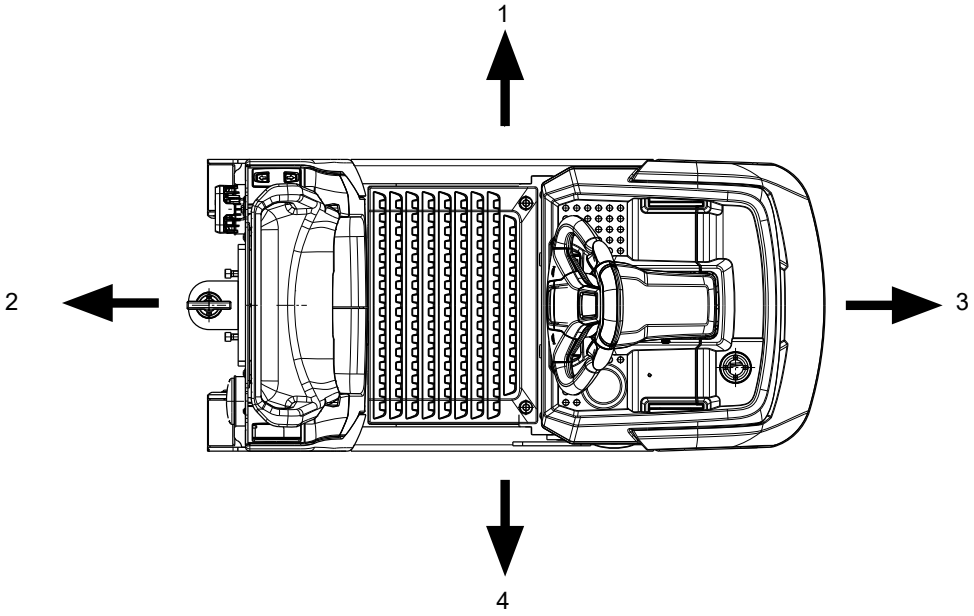

Item	Travel direction
4	Right
3	Drive direction, forwards (F)
2	Load direction, reverse (R)
1	Left

3 Assemblies and Functional Description

3.1 Assembly Overview

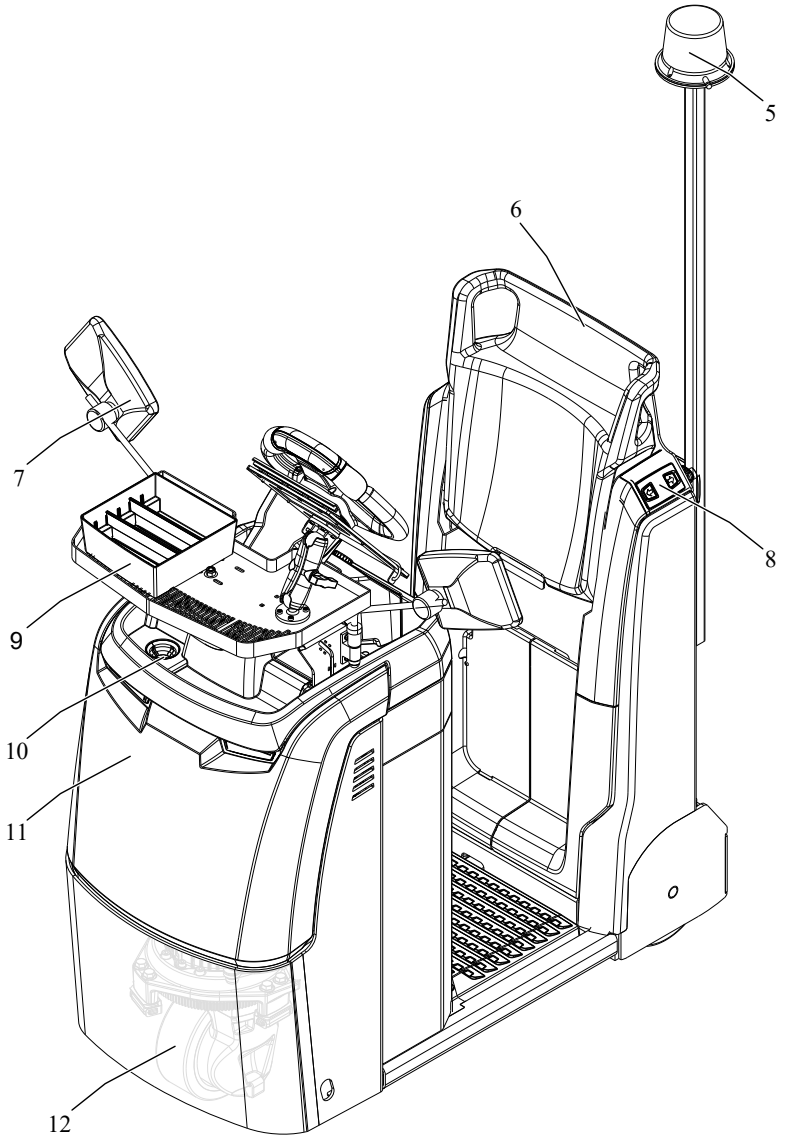

Item		Designation
5	○	Strobe
6	●	Backrest
7	○	Side mirror
8	○	Pedestrian mode buttons
9	○	Storage container
10	○	On-board battery charger
11	●	Drive panel
12	●	Drive wheel

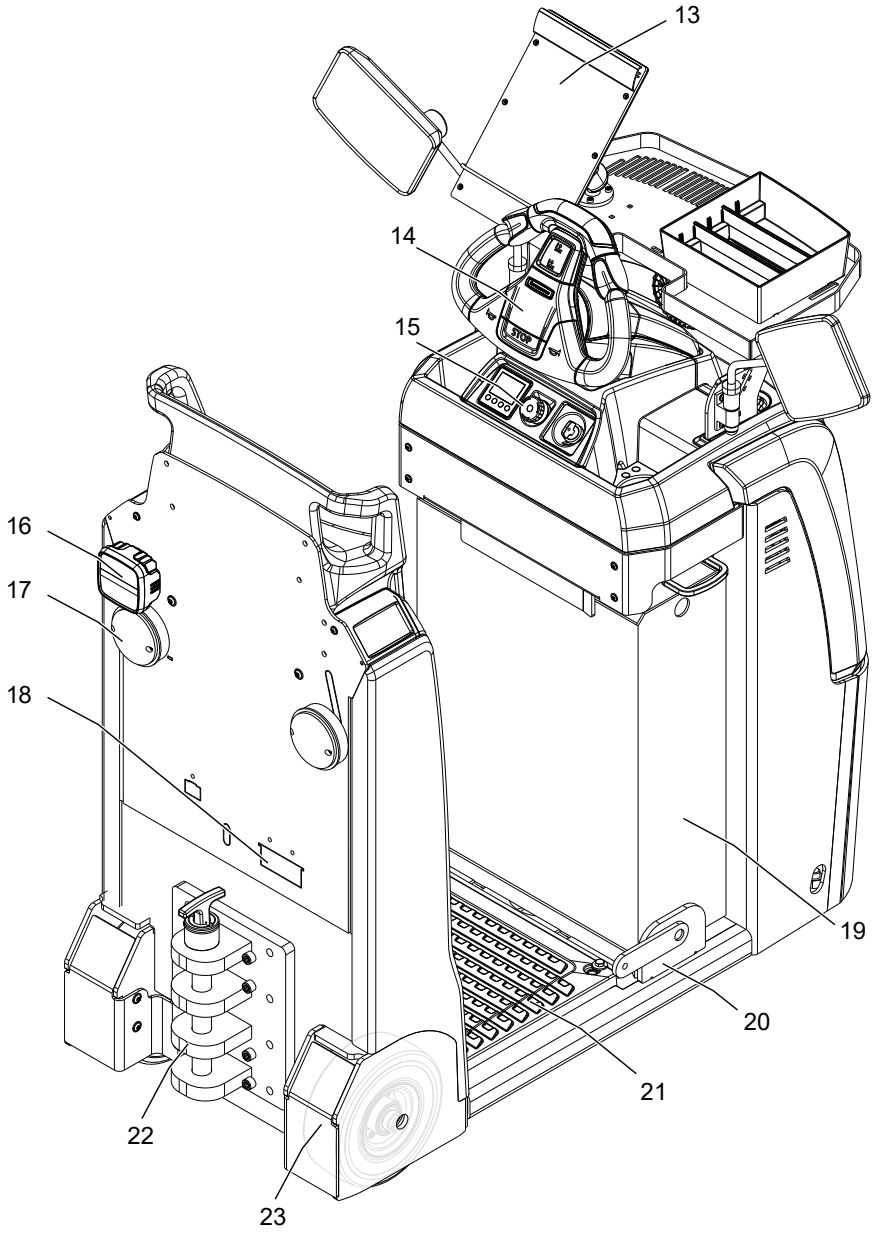

Item		Designation
13	○	Universal holder with clip pad
14	●	jetPILOT
15	●	Emergency disconnect switch
16	○	Reverse lights
17	○	Tail lights including brake lights
18	○	Electrical interface between tow tractor and trailer
19	●	Battery
20	●	Battery latch
21	●	Operator platform
22	○	Trailer coupling
23	●	Load wheel

3.2 Functional Description

Safety mechanisms

An enclosed, smooth truck geometry with rounded edges ensures safe handling of the truck. The wheels are surrounded by a solid skirt.

Activating the emergency disconnect switch rapidly cuts out all electrical functions in hazardous situations.

Emergency stop safety concept

The emergency stop is activated by the traction controller. Each time the truck is switched on, the system carries out a self-diagnosis. The steering controller sends a system status signal, which is monitored by the traction controller. If the signal fails to appear or a fault is identified, the truck automatically brakes to a halt. Event messages on the display unit indicate the emergency stop.

Further information: see page 93.

⚠ CAUTION!

Automatic braking can cause accidents

If the truck detects that signals which are required have not been received, or if it detects an error, the system reacts by triggering an emergency stop, either by braking the truck to a halt or until a valid signal status has been reached.

- ▶ In ride-on mode: Take up a stable standing position and hold on with both hands.
- ▶ In pedestrian mode: Remain at a suitable distance from the truck during operation.

Operator position

The comfort back padding (○) and the comfort back padding with a fold-out driver's seat (○) are height-adjustable.
All travel and lift functions (○) can be operated without having to change grip. The jetPILOT allows the truck to be controlled safely.

Operator platform

Travel functions are only enabled when the operator is standing on the platform.

Curve Control

The Curve Control option assists the operator in handling the truck. When cornering, the maximum travel speed is adapted to the steer angle.

➔ The default setting can be changed by the manufacturer's customer service department.

Drive system

A fixed AC three-phase motor actuates the drive wheel via a bevel spur gearbox. The electronic traction controller ensures smooth drive-motor-speed control and hence smooth starting, powerful acceleration and electrically controlled braking with energy regeneration. The driver can choose from 3 travel programs depending on the load and the environment: from high-performance to energy-saving.

Steering

The operator steers with a JetPilot. The steering motion is transmitted from the steering controller via a steer motor directly to the ring gear of the pivoted drive system. The drive system can be pivoted +/- 90°.

Electrical system

The truck is equipped with an electronic traction and steering controller. The truck electrical system has an operating voltage of 24 volts.

Controls and displays

Ergonomic controls ensure fatigue-free operation for sensitive application of the travel and hydraulic operations. The display unit (○) shows the operator information such as travel program, service hours, battery capacity, residual run time, travel speed and event messages.

3.2.1 Hourmeter

Prepare the truck for operation, see page 73 or see page 112.

Service hours are counted while the truck is operational and the operator is standing on the platform.

3.2.2 Hourmeter in Pedestrian Mode

Prepare the truck for operation, see page 73 or see page 112.

Service hours are counted while the truck is operational and one of the following controls is applied:
– "Pedestrian - drive direction" button, see page 90.
– "Pedestrian - load direction" button, see page 90.

4 Technical Specifications

➔ The technical specification is given according to the German guideline "Type sheets for industrial trucks". Technical modifications and additions reserved.

➔ The technical data of the battery is summarised in the battery section – see page 33.

4.1 Performance data

		EZS 130
	Drive system: electric (battery type, mains, …), diesel, petrol, LPG	Electric
	Operation: manual, pedestrian, standing, sitting, order picker	Standing
Q	Capacity/load	3 t
F	Nominal drawbar pull	600 N
y	Wheelbase	930 mm
	Travel speed with load	9 km/h
	Travel speed without load	10.5 km/h
	Drawbar pull with load	600 N
	Drawbar pull without load	600 N
	Max. drawbar pull with load	2000 N
	Max. drawbar pull without load	2000 N
	Service brake	Electromagnetic
	Drive motor, output S2 60 min	2.8 kW
	Battery voltage	24 V
	Rated capacity K5	200 Ah

4.2 Dimensions

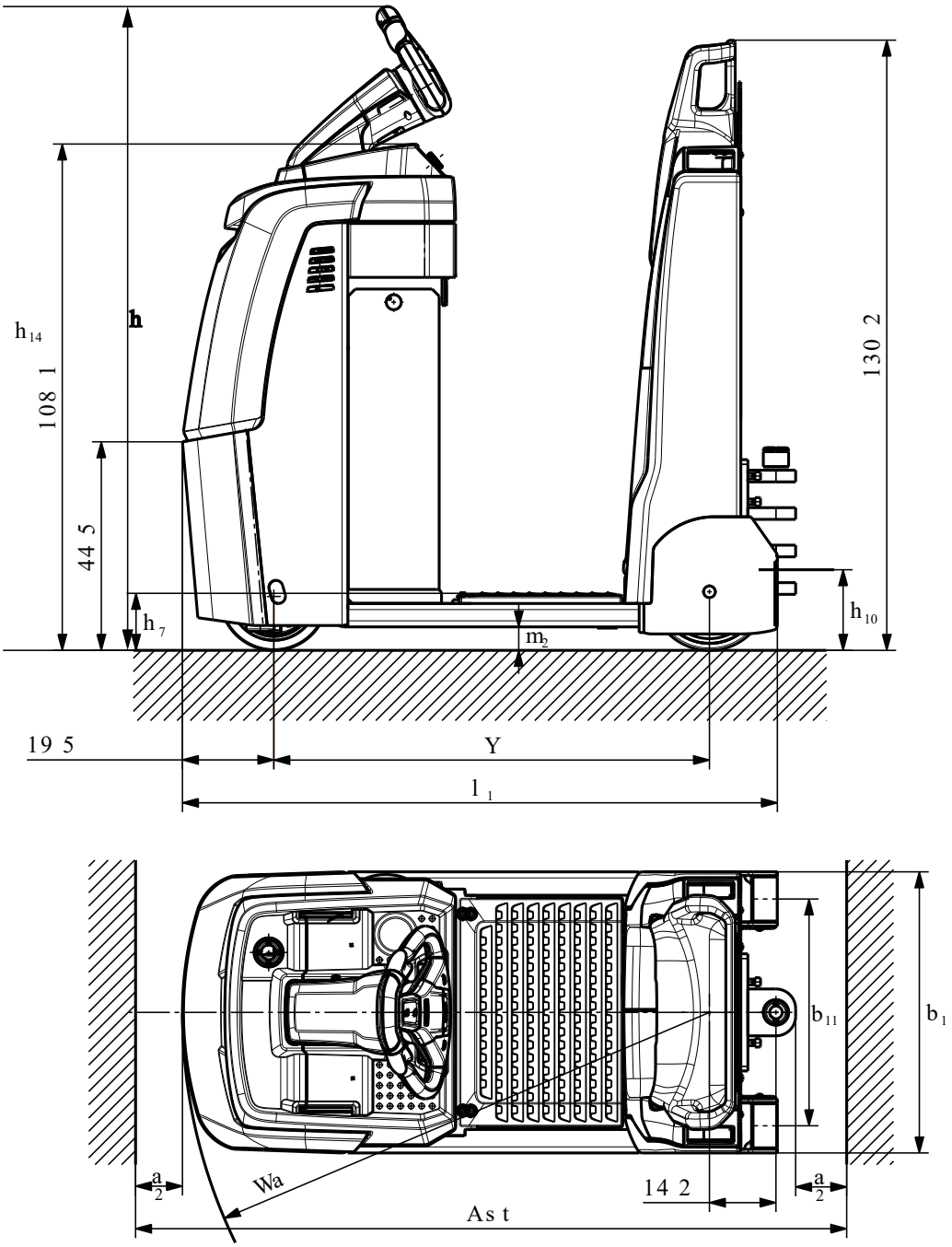

		EZS 130
h_{14}	Tiller handle height in travel position min./max.	1320 mm
h_{10}	Coupling height	158 mm
l_1	Overall length	1315 mm
b_1|b_2	Overall width	600 mm
m_2	Ground clearance, centre of wheelbase	50 mm
W_a	Turning radius	1126 mm

4.3 Weights

	EZS 130
Truck weight	525 kg
Axle load without load at front	320 kg
Axle load without load at rear	205 kg
Battery weight	170 kg

4.4 Tyre type

		EZS 130
	Tyres: solid rubber, super-elastic, pneumatic, polyurethane	Vulkollan, super-elastic
	Tyre size, front	Ø 230 x 78 mm
	Tyre size, rear	Ø 250 x 80 mm
	Wheels, number front/rear (× = driven)	1x/2
b_{11}	Track width, rear	485 mm

4.5 EN norms

Continuous sound pressure level

– EZS 130: 65 dB(A)

in accordance with EN 12053 as harmonised with ISO 4871.

The continuous sound pressure level is calculated according to standard procedures and takes into account the sound pressure level when travelling, lifting and idling. The sound pressure level is measured at the operator's ear.

Vibration

– EZS 130: 0,96 m/s²

in accordance with EN 13059

The vibration acceleration acting on the body in the operating position is, in accordance with standard procedures, the linearly integrated, weighted acceleration in the vertical direction. It is calculated when travelling over thresholds at constant speed. These recordings were taken on a single occasion and must not be confused with the human vibrations of the "2002/44/EC/Vibrations" operator directive. The manufacturer offers a special service to measure these human vibrations, see page 165.

Electromagnetic compatibility (EMC)

The manufacturer confirms that the truck adheres to the limits for electromagnetic emissions and resistance as well as the static electricity discharge test in accordance with EN 12895 as well as the standardised instructions contained therein.

No changes to electric or electronic components or their arrangement may be made without the written agreement of the manufacturer.

⚠ WARNING!

Damage to medical equipment due to non-ionising radiation

Electrical equipment on the truck emitting non-ionising radiation (e.g. wireless data transmission) can affect operators' medical equipment (pacemakers, hearing aids etc.) and result in malfunctions.

▶ Consult a doctor or the manufacturer of the medical equipment to clarify whether the medical equipment can be used near the industrial truck.

4.6 Specifications according to RED guideline (Radio Equipment Directive) for radio units

➔ The table contains any components installed according to the European Directive 2014/53/EU. The table shows the affected frequency range and the emitted transmission power for each component.

Component	Frequency range	Transmission power
Control band	13,56 MHz	< 100 mW
Control band	13,56 MHz	< 100 mW
Radio module	2,4 GHz	10 mW
Radio module	2,4 GHz	10 mW
Transponder reader	13,56 MHz	< 100 mW

4.7 Electrical Requirements

The manufacturer certifies compliance with the requirements for the design and manufacture of electrical equipment, according to EN 1175 "Industrial Truck Safety - Electrical Requirements", provided the truck is used according to its purpose.

4.8 Power supply of on-board charger (○)

Designation	Mains voltage	Mains frequency
ELH on-board charger (○)	230 V/115 V (+15/-10%)	50/60 Hz

4.9 Conditions of use

Ambient temperature

– operating at 5°C to 40°C

➔ Special equipment and authorisation are required if the truck is to be used continually in conditions of extreme temperature or condensing air humidity fluctuations.

5 Identification Points and Data Plates

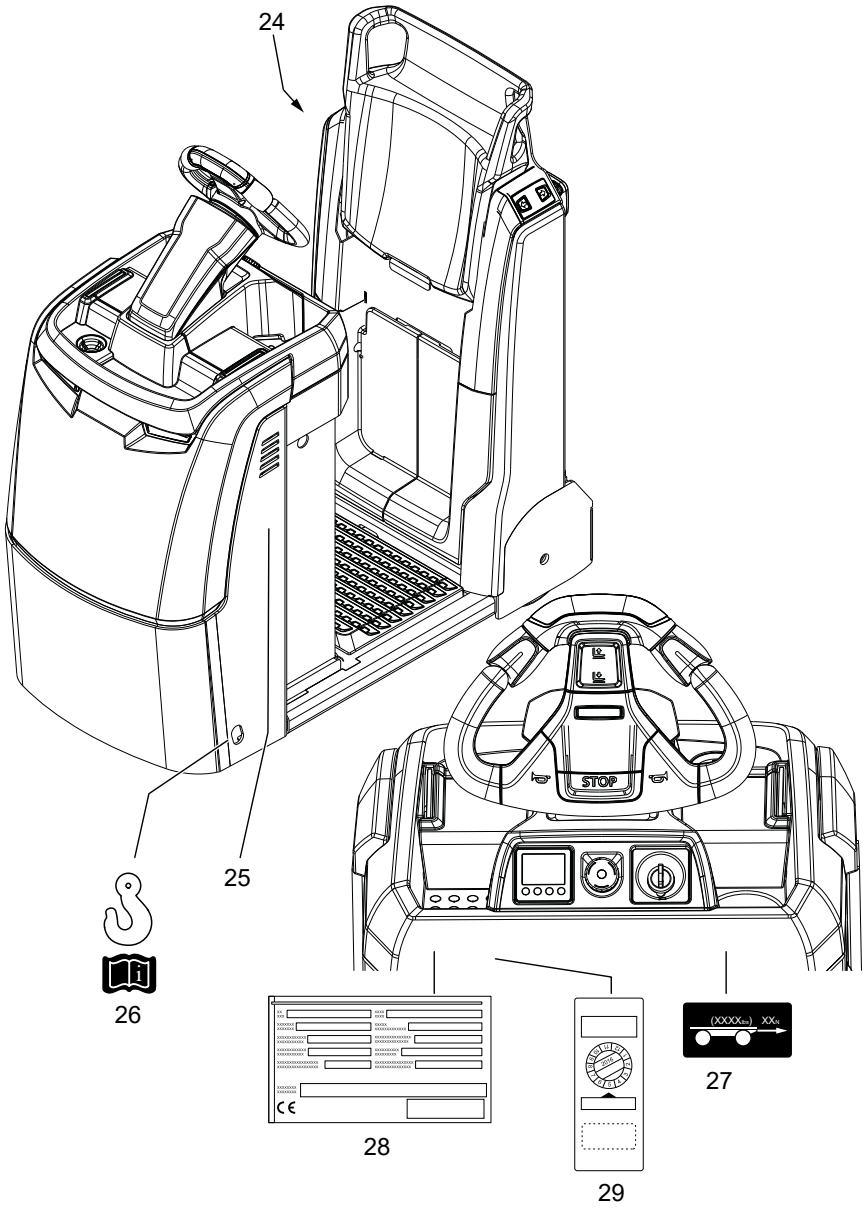

Item	Description
28	Data plate
24	Serial number
29	Inspection plaque
26	Attachment points for loading by crane
25	Model description
27	Decal: "Trailer load"

5.1 Data plate

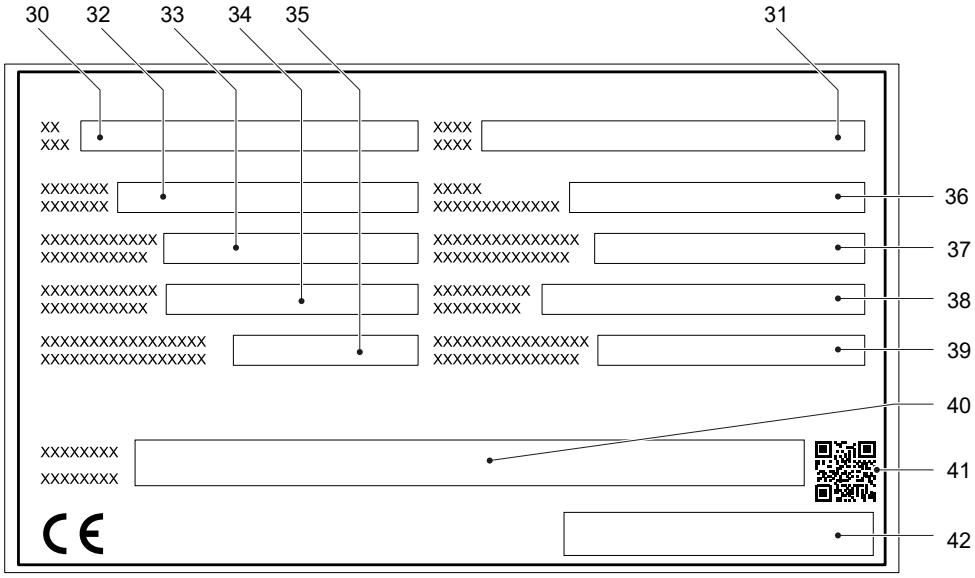

Item	Description	Item	Description
30	Type	37	Rated drawbar pull 5 min. (N)
31	Year of manufacture	38	Nominal power
32	Serial number	39	Min./max. battery weight (kg)
33	Rated drawbar pull 60 min. (N)	40	Manufacturer
34	Battery voltage (V)	41	QR code
35	Support force	42	Manufacturer's logo
36	Option		

For queries regarding the truck or when ordering spare parts, always quote the truck serial number (32).

The battery data plate is described in the relevant section – see page 45.

NOTICE

The truck must only be operated with the towing/trailer load specified on the trailer coupling.
If no information is given on the trailer coupling (standard or optional equipment), the maximum permissible towing/trailer load specified for the truck applies see page 21.
If the operating company fits a trailer coupling, the towing/trailer loads on the trailer coupling or the maximum permissible towing/trailer load specified for the truck apply.

QR code

The QR code contains the serial number and product hierarchy of the truck.

C Transport and Commissioning

1 Lifting by crane

⚠ WARNING!

Improper loading by crane can result in accidents

Improper use or use of unsuitable lifting gear can cause the truck to fall when being loaded by crane.

- ▶ Prevent the truck from hitting other objects during lifting, and avoid uncontrolled movements. If necessary, secure the truck with guide ropes.
- ▶ Loading by crane may only be performed by persons who have been trained in the use of the lifting accessories.
- ▶ Wear personal protective equipment (e.g. safety shoes, hard hat, hi-vis jacket, protective gloves) when loading by crane.
- ▶ Do not stand under suspended loads.
- ▶ Do not enter or stand in the hazardous area.
- ▶ Always use lifting gear with sufficient capacity (observed truck weight in accordance with truck data plate – see page 27).
- ▶ Always secure crane lifting gear to the prescribed attachment points and prevent it from slipping.
- ▶ Use the lifting accessories only in the prescribed load direction.
- ▶ Lifting slings should be fastened in such a way that they do not come into contact with any attachments when lifting.

Lifting the truck by crane

Requirements

– Park the truck securely, see page 75.

Tools and Material Required

– Lifting gear
– Crane lifting gear

Procedure

• Secure the lifting slings to the strap points (26).

The truck can now be lifted by crane.

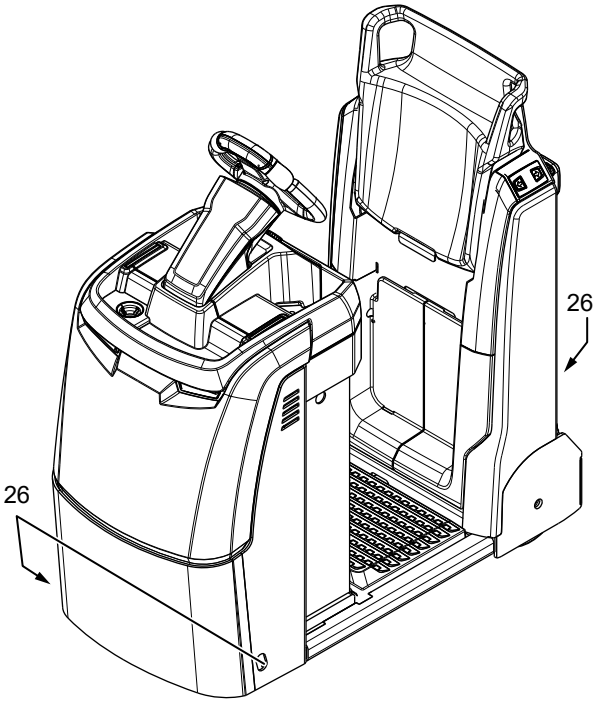

2 Transport

⚠ WARNING!

Danger due to uncontrolled movement of the truck or the mast during transport

If the truck and mast are not properly secured during transport, serious accidents can occur. Slipping lashing straps can lead to uncontrolled movements of the truck or mast and even a fall during transport. Accidents caused by this can result in property damage and fatal injuries.

- ▶ Loading must only be performed by specialist personnel trained for this purpose. The specialist personnel must be instructed in securing loads on road vehicles and working with load securing equipment. Correct dimensioning and implementation of load securing measures must be ensured in each individual case.
- ▶ The truck or mast must be professionally and securely fastened when transported on a lorry or trailer.
- ▶ The lorry or trailer must be equipped with lashing rings.
- ▶ Use wedges to prevent the truck from accidentally moving.
- ▶ Use only lashing straps with sufficient tensile strength. Attach the lashing straps so that they cannot slip.
- ▶ Use non-slip materials to secure the transport aids (pallet, wedges, etc.), e.g. non-slip mats.

Securing the truck for transport

Requirements

– Load the truck.
– Truck parked securely, see page 75.

Tools and Material Required

– Lashing straps
– Edge protectors
– Wooden beam or pallet

Procedure

- Position the wooden beam or pallet between the front of the transport vehicle and the truck to ensure a positive fit.
- Attach the lashing straps (43) to the industrial truck and the transport vehicle and tension sufficiently.

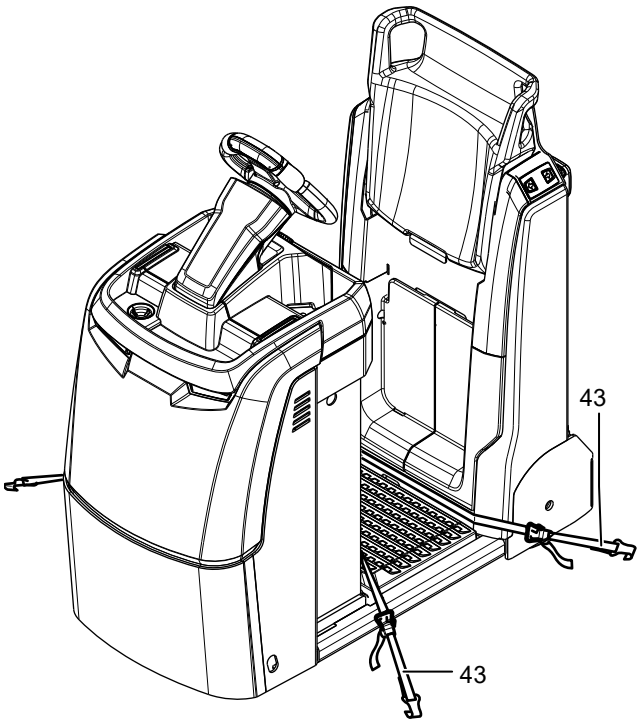

➔ Use edge protectors to protect the truck and the lashing straps.

The truck can now be transported.

3 Using the Truck for the First Time

⚠ WARNING!

The use of unsuitable energy sources can be hazardous

Rectified AC current will damage the assemblies (controllers, sensors, motors etc.) of the electronic system.

Unsuitable cable connections (too long, insufficient wire cross-section) to the battery (tow cables) can overheat, setting the truck and battery on fire.

▶ The truck must only be operated with battery current.

▶ Cable connections to the battery (tow leads) must be less than 6 m long and have a minimum cross-section of 50 mm².

Procedure

- Check the equipment is complete.
- Install the battery if necessary, see page 62.
- Charge the battery, see page 55.

➔ The truck settings must match the battery type.

The truck can now be started, see page 72.

➔ If the truck is equipped with a display unit the delivery code is marked on a sticker, see page 109.

➔ If the truck is equipped with a keypad or a transponder reader, it can only be operated at first by the keys in the display unit, see page 109.

Conversion to lithium-ion battery operation changes some of the functions and properties of the truck.

D Battery - Servicing, Recharging, Replacement

1 Replaceable lead-acid and lithium-ion batteries

1.1 Notes on Battery Technologies

Acid batteries

The truck is equipped with an acid battery as standard. The following sections relate to this battery technology.

Lithium-ion batteries (○)

The trucks may be optionally equipped with a lithium-ion battery. All notes and information concerning lithium-ion batteries can be found in the separate "Lithium-ion battery 24 V - 200 Ah" operating instructions.

Information on charging integrated modular lithium-ion batteries – see page 57.

2 Safety instructions for handling lead-acid batteries

Maintenance personnel

Batteries may only be charged, serviced or replaced by trained personnel. These operating instructions and the manufacturer's instructions concerning batteries and charging stations must be observed when carrying out the work.

Fire protection measures

⚠ WARNING!

Short circuits can result in fire

Damaged cables can cause short circuits, setting the forklift truck and battery on fire.

▶ Before closing the battery cover make sure that the battery cables are not damaged.

⚠ CAUTION!

The use of unsuitable fire-protection equipment can result in acid burns

In the event of fire, a reaction with the battery acid can occur if water is used to extinguish the fire. This can lead to acid burns.

▶ Use powder extinguishers.

▶ Never extinguish burning batteries with water.

Do not smoke and avoid naked flames when handling batteries. Wherever an industrial truck is parked for charging, there must be no inflammable material or consumables capable of creating sparks within a minimum distance of 2,5 m from the truck. The room must be ventilated. Fire protection equipment must be on hand.

Battery maintenance

The battery-cell covers must be kept dry and clean. The terminals and cable lugs must be clean, secure and have a light coating of terminal grease.

Battery disposal

Batteries may only be disposed of in accordance with national environmental protection regulations or disposal laws. The manufacturer’s disposal instructions must be observed.

2.1 General notes on handling batteries

⚠ WARNING!

Risk of accidents and injuries when handling acid batteries

Batteries contain dissolved acid, which is toxic and caustic. Above all, avoid any contact with battery acid.

- ▶ Dispose of used battery acid in accordance with regulations.
- ▶ Wear protective clothing and eye protection when working with acid batteries.
- ▶ Do not let battery acid come into contact with skin, clothing or eyes. If necessary, rinse with plenty of clean water.
- ▶ In the event of physical injuries (e.g. skin or eye contact with battery acid), call a doctor immediately.
- ▶ Neutralise spilled battery acid immediately with plenty of water.
- ▶ Use only batteries with a closed battery tray.
- ▶ Follow national guidelines and legislation.

⚠ WARNING!

Unsuitable batteries that have not been approved by Jungheinrich for the truck can be hazardous

The design, weight and dimensions of the battery have a considerable effect on the operational safety of the truck, in particular its stability and capacity. The use of unsuitable batteries that have not been approved for the truck by Jungheinrich, can lead to a deterioration of the braking characteristics of the truck during energy recovery, causing considerable damage to the electric controller and resulting in serious danger to the health and safety of individuals.

- ▶ Only Jungheinrich-approved batteries may be used on the truck.
- ▶ Battery equipment may only be replaced with the agreement of Jungheinrich.
- ▶ When replacing/installing the battery make sure the battery is securely located in the battery compartment of the truck.
- ▶ Do not use batteries that have not been approved by the manufacturer.

The truck must be parked securely before all work on the batteries, see page 75.

3 Integrated Modular Lithium-Ion Battery

3.1 Notes on Lithium-Ion Batteries

Lithium-ion batteries

The truck is equipped with a lithium-ion battery.

General information

The truck is optionally fitted with an integrated modular lithium-ion battery. All notes and information concerning lithium-ion batteries can be found in these operating instructions.

The Jungheinrich lithium-ion batteries are maintenance-free batteries with rechargeable high-performance energy cells. The batteries' daily operating time can be extended through intermediate charges.

The battery is continually monitored by the battery management system. The battery management system checks for example the cell temperature, the voltage and the charge status of the cells, as well as releasing charge and discharge processes.

➔ The battery management system data can be checked by the manufacturer's customer service department.

Lithium ion battery management system

Charging and discharging of the lithium ion battery is enabled and monitored. Faults or messages warning of approaching critical values are displayed. If necessary, the truck is switched off.

The battery management system is connected to the truck via an interface.

When the charge status approaches a critical value, the operator is notified by the display message.

3.2 Safety regulations for handling lithium-ion batteries

Maintenance personnel

Batteries may only be charged, serviced or replaced by trained personnel. These operating instructions and the manufacturer’s instructions concerning batteries and charging stations must be observed when carrying out the work.

3.2.1 Correct application

No hazards are anticipated if the equipment is used correctly.

The following hazards can arise in the event of improper use:
- Physical damage:
  Mechanical damage may lead to problems including falling or deformation of the lithium-ion battery due to pressure.
  Mechanical damage includes cracks, breaks, splinters or holes in the battery housing. This type of damage can cause a short circuit inside the lithium-ion battery.
- Short circuits:
  Short circuits may be caused by connecting the two battery terminals (e.g. battery immersed in water).
- Temperature effects:
  High temperatures caused by, for example, sunlight or storage in warm locations (e.g. close to ovens) can cause premature ageing and damage to the lithium-ion battery.

Safe places for storing batteries until the manufacturer's customer service department arrives on site must satisfy the following criteria:
– Do not store in places often frequented by personnel.
– Do not store in places where valuable objects (e.g.cars) are stored.
– A carbon dioxide extinguisher (CO_2) must be provided on site.
– There should be no fire or smoke detectors in the vicinity in order to ensure that an automatic fire detection system is activated only in the event of actual danger (e.g. naked flames).
– Small amounts of discharge from a single lithium-ion battery are not critical to the environment. Above-average natural ventilation is required in this case.
– No ventilation intake pipes should be in the vicinity, as discharged content could spread within a building.

Examples of where to store a non-functional lithium-ion battery:
– Roofed outdoor position
– Ventilated container
– Covered box with pressure and smoke discharge option

3.2.2 Storing the battery

NOTICE

Damage to the lithium-ion battery due to discharge

If the lithium-ion battery is not used for a long period of time, it can become damaged through discharge.

▶Fully charge the battery before extended downtimes.

▶To ensure a long service life of the lithium-ion battery, it must be fully charged every 4 weeks when not in use.

3.2.3 Instructions for disposal

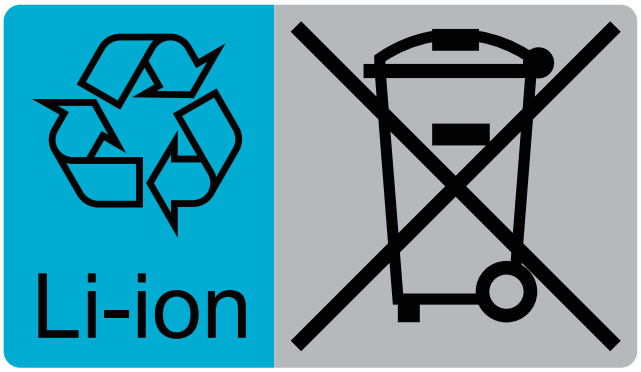

Used lithium-ion batteries are recyclable commodities. As part of a resource-efficient approach, where possible, lithium-ion batteries should undergo reuse, preparation for reuse, preparation for repurposing, repurposing, or reprocessing.

Lithium-ion batteries are classified as waste requiring special monitoring for recycling. Marked with the recycling symbol and the crossed-out wheeled bin, lithium-ion batteries must not be disposed of with household waste.

Buy back or recycling must be ensured, e.g. in accordance with Battery Directive (EU) 2023/1542 . Buy-back terms and the manner of recycling must be agreed with the manufacturer.

Instructions for disposal

To ensure proper treatment and recycling, the owner is legally obliged to dispose of lithium-ion batteries separately from other waste.

- ▶ Lithium-ion batteries must be disposed of in compliance with applicable national environmental protection regulations or disposal laws.
- ▶ For disposal of lithium-ion batteries, contact the manufacturer's customer service department, a customer service department authorised by the manufacturer or an approved certified recycling company.

3.2.4 Shipping information

The Jungheinrich lithium-ion battery is a hazardous material. The applicable ADR regulations must be observed during transport.

➔ ADR = Accord européen relatif au transport international des marchandises Dangereuses par Route.

➔ If in doubt, contact the manufacturer's customer service department.

A modular lithium-ion battery integrated into the truck can be transported with the truck without special precautions.

3.2.5 Battery lifetime and maintenance

NOTICE

Damage to the lithium-ion battery due to discharge

If the lithium-ion battery is not used for a long period of time, it can become damaged through discharge.

- ▶ Fully charge the battery before extended downtimes.
- ▶ To ensure a long service life of the lithium-ion battery, it must be fully charged every 4 weeks when not in use.

The lithium-ion battery is a wear-free, maintenance-free and gassing-free (emission-free) sealed system.

➔ No maintenance intervals are planned for this lithium-ion battery. For example, no refilling of liquids or other substances is necessary.

The lithium-ion battery is continually monitored by the battery management system.

3.2.6 Dangers and information relating to fire in the vicinity of the lithium-ion battery

The lithium ion battery may be damaged by a fire in the vicinity of the lithium ion battery. When fighting a lithium-ion battery fire, the following dangers and information must be taken into consideration.

3.2.6.1 Particular hazard from combustion products

⚠ WARNING!

Risk due to contact with combustion products

Combustion is a chemical process by which a flammable material combines with oxygen under heat and light (fire). The resulting combustion products can occur in the form of smoke, through leaking fluids, escaping gases, debris as well decomposition products of certain chemicals. These combustion products are substances that enter the body through the respiratory tract or skin, where they can produce adverse effects such as choking.

▶Avoid contact with combustion products.

▶Use protective equipment.

– Hydrogen fluoride (HF) Hydrofluoric acid = extremely corrosive
– Risk of toxic substances produced by pyrolysis
– Risk of highly flammable gas mixtures.
– Other combustion products: Carbon monoxide & - dioxide.

3.2.6.2 Special fire fighting protective equipment

– Use self-contained breathing apparatus.
– Wear protective overalls.

3.2.6.3 Additional fire fighting instructions

To prevent secondary fires from occurring, the lithium-ion battery must be cooled from the outside. Fluids or solids must never be directed into the lithium-ion battery.

Suitable extinguishing agents
– Carbon dioxide extinguisher (CO_2)
– Water (not on mechanically opened or damaged batteries!)

Unsuitable extinguishing agents
– Foam
– Grease fire extinguishing agents
– Powder extinguishers
– Metal fire extinguishers (PM 12i extinguishers)
– Metal fire powder PL-9/78 (DIN EN 3SP-44/95)
– Dry sand

3.2.7 Touch voltage hazard

⚠ WARNING!

Touch voltage hazard

Hazardous touch voltages may occur in the event of a technical or mechanical defect on a lithium-ion battery. Touch voltages also occur on seemingly discharged lithium-ion batteries. Touching the battery terminals or live attachments (battery cable, battery connector etc.) can result in dangerous current flows through the body. There is a risk of serious irreversible or fatal injuries.

- ▶ Tag out faulty lithium-ion batteries and take them out of service.
- ▶ Do not touch faulty lithium-ion batteries.
- ▶ Do not place any objects or tools on the lithium-ion battery to avoid short-circuiting the lithium-ion battery.
- ▶ Do not short-circuit the lithium-ion battery.
- ▶ Contact the manufacturer's customer service department or a customer service department authorised by the manufacturer.

With this kind of defect, the battery must not be touched and must not come into contact with metal objects – see page 36.

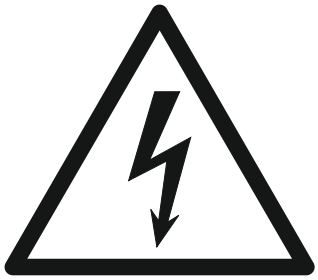

3.2.8 Hazard and Safety Instruction Phrases

Hazard and safety instruction phrases are codified hazard and safety instruction phrases for hazardous materials used as part of the globally harmonised system for the grading and identification of chemicals.
The following H phrases describe the hazards arising from the battery cells and their contents.
The P phrases describe the safety measures to be applied.

3.2.8.1 Hazard Instruction Phrases (H phrases)

Physical hazards (H200 range)

H242	Heating can result in fire.

3.2.8.2 Safety Instruction Phrases (P phrases)

General (P100 range)

P102	Keep out of reach of children.

Prevention (P200 range)

P201	Obtain special instructions before use.
P202	Read and understand all safety instructions before use.
P233	Keep containers sealed.
P235 + P410	Keep cool. Protect against direct sunlight.
P251	Do not penetrate or burn, even after use.
P261	Avoid inhalation of dust, smoke, gas, steam, vapours or aerosols.

Reaction (P300 range)

P314	Seek medical advice or assistance if feeling unwell.
P304 + P340	In case of inhalation: Bring the person into fresh air and ensure he or she can breath unhindered.
P313 + P332	For skin irritation: Seek medical advice or assistance.
P313 + P337	For persistent eye irritation: Seek medical advice or assistance.
P370 + P378	In the event of fire: Use CO_2 to extinguish.
P370 + P380	In the event of fire: Clear the area.

Storage (P400 range)

P410 + P412	Protect against direct sunlight and do not subject to temperatures in excess of 50 °C.
P411 + P235	Keep cool and do not store in temperatures in excess of 40 °C.

Disposal (P500 range)

P502	Obtain information on recycling or reuse from the manufacturer or supplier.

3.3 Battery types

Depending on the version, the truck is equipped with different battery types. The following table shows the different battery types.

Battery type	Rated voltage	Number of cells	Capacity
Lithium ion	25.6 V	3.2 V x 8 cells	130 Ah
Lithium ion	25.6 V		260 Ah

3.4 Battery data plate

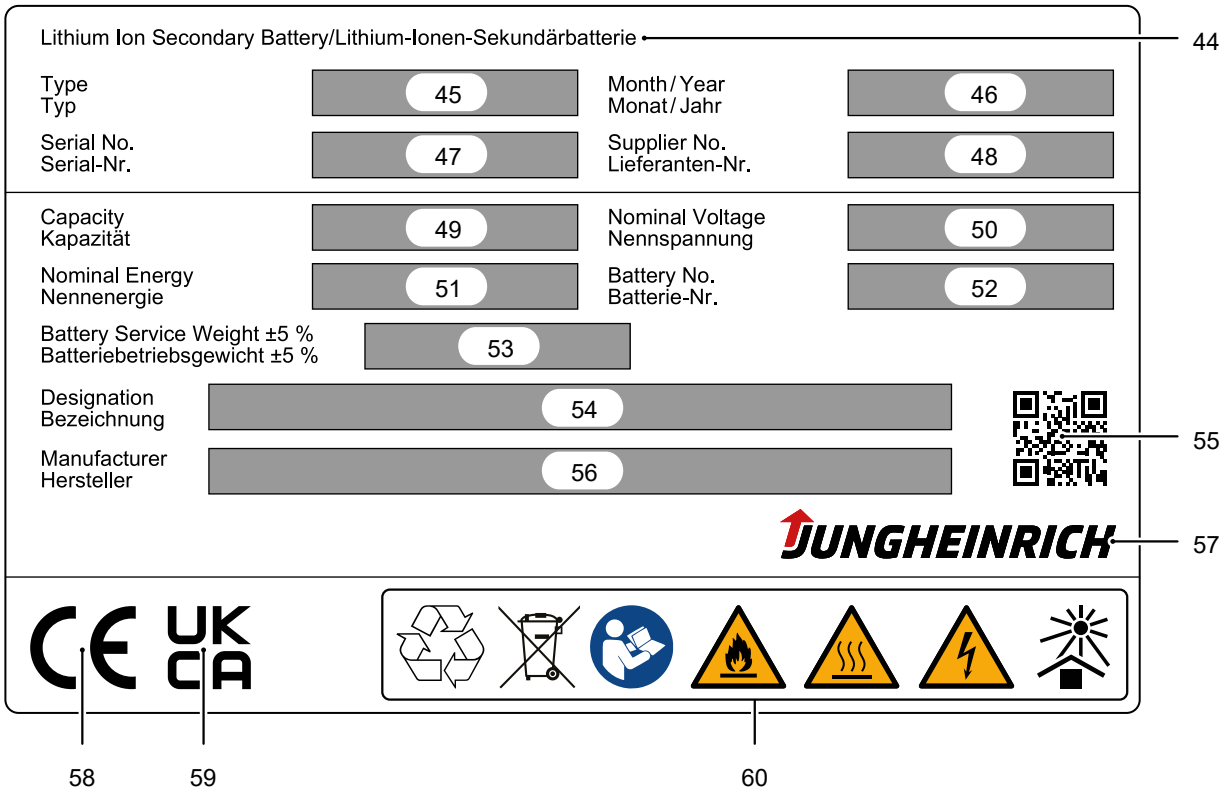

Item	Designation
44	Lithium-ion secondary battery
45	Battery type
46	Year of manufacture
47	Serial number
48	Supplier number
49	Rated capacity in ampere-hours [Ah]
50	Rated voltage in volts [V]
51	Rated energy in watt-hours (Wh)
52	Battery number
53	Battery weight in kilogrammes [kg] – Tolerance range: ± 5 %
54	Designation
55	QR code
56	Manufacturer
57	Manufacturer's logo
58	CE mark (*Conformité Européenne*)
59	UKCA marking (*United Kingdom Conformity Assessed*)
60	Safety and warning information – see page 47

3.4.1 Safety and warning information

	Observe the operating instructions – The operating instructions must be clearly visible at the charging location. – If any faults are identified on the battery, the battery must no longer be used. Immediately tag out the faulty battery and take it out of service. Contact the manufacturer's customer service department or a customer service department authorised by the manufacturer. – Do not attempt to rectify faults independently. – Do not open the battery.
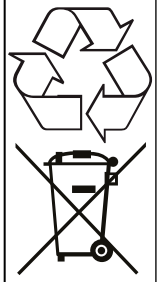	Used batteries are recyclable commodities. These batteries must be treated as hazardous waste. As indicated by the marking showing the recycling symbol and a crossed-out waste bin, batteries must not be disposed of as domestic waste. Buy back or recycling must be ensured, e.g. in accordance with Battery Directive (EU) 2023/1542. Buy-back terms and the manner of recycling must be agreed with the manufacturer.
	Avoid fire and short-circuits due to overheating – Do not ignite or position open flames, glowing embers or sparks near the lithium-ion battery. – Keep batteries away from strong heat sources.
	Hot surfaces – Battery cells can generate very high short-circuit currents, causing them to become hot.
	Hazardous electrical voltage – The metal parts of the battery cells are permanently live. Therefore, do not place any foreign objects or tools on the battery. – Observe the accident prevention regulations and DIN EN 62485-3.
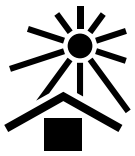	Protect the battery against heat and solar radiation.

3.5 Usability depending on the battery cell temperature

Lithium-ion battery temperature	Usability
-10 °C to +55 °C [1,2]	Travel and hydraulic functions: – The usable battery capacity and power is reduced at low temperatures.
0 °C to +55 °C [3]	➔ Reduction in the charge current depending on the battery temperature – battery without optional "heater" equipment (●), see page 49.

[1] The permissible range of the lithium-ion battery application temperature does not increase the permissible range of the truck's application temperature. Note the permissible temperature range for truck application; refer to the truck operating instructions.

[2] corresponds to an ambient temperature of approx. -10°C to +40°C.

[3] corresponds to an ambient temperature of approx. 0°C to +40°C.

Cold-store application (below -10 °C) is prohibited.

If the temperature is too high or too low, the battery management system shuts down the lithium-ion battery.

Extended exposure to low temperatures causes the lithium-ion battery to cool down, thereby reducing the usable battery capacity.

⚠ WARNING!

Danger of accidents due to regenerative braking fault

Regenerative braking faults can result in extended stopping distances and accidents, particularly when travelling on inclines. Other persons can be injured in the truck's hazardous area.

- ▶ Keep all persons out of the hazardous area during travel operations.
- ▶ Instruct other people to move out of the hazardous area of the truck. Stop working with the truck if people do not leave the hazardous area.
- ▶ In emergencies, use the service brake for braking.

If the lithium-ion battery is in the low-temperature range, the lift function may be impaired and regenerative braking with the coasting brake may not function correctly.

The usable battery capacity and power are reduced at low temperatures.

➔ A notification symbol appears on the display unit when the lithium-ion battery is in the low-temperature range.

3.6 Exposing the battery

Exposing the fixed lithium-ion battery is analogous to exposing the replaceable batteries, see page 54.

3.7 Charging the battery

3.7.1 Safety Instructions for Charging Lithium-Ion Batteries

Only charge the lithium-ion battery with the manufacturer's stationary battery charger SLH 300i. Observe the battery charger operating instructions.

⚠ WARNING!

Warning: hazardous electrical voltage!

The charger is an electric component conducting voltages and currents that are hazardous to people.

- ▶ The charger must only be operated by trained technicians.
- ▶ Disconnect the mains supply and the battery connector before carrying out any work on the charger.
- ▶ The charger should only be opened and serviced by trained electricians.

⚠ WARNING!

Risk of accidents and injuries when handling lithium-ion batteries

Improper use can result in overheating, fire or explosion.

- ▶ Do not expose the lithium-ion battery during charging.
- ▶ Do not use the lithium ion battery cable connected to the truck for charging.
- ▶ Do not place any metallic objects on the lithium-ion battery.

⚠ WARNING!

Danger of overheating when charging with an unsuitable battery charger

The use of an unsuitable charger can cause the battery to overheat.

- ▶ Only charge the lithium-ion battery with a battery charger specially designed for this battery. Observe the operating instructions and operating conditions for the battery charger.

NOTICE

Intermediate charging

A lithium-ion battery that is not fully discharged can be recharged at any time either in part of in full. In order to ensure the reliable operation of the lithium-ion battery, the following must be borne in mind:

- ▶ In the event of frequent intermediate charging, charge the lithium-ion battery fully every 4 weeks. If the battery charger has a “balancing” function, ensure that the balancing phase is completed at the end of charging. Further information on “balancing” can be found in the operating instructions for the battery charger.
- ▶ Turn off the battery charger before disconnecting the lithium-ion battery from the battery charger.

If the battery is deeply discharged or if the battery temperature is below the permissible level (+5 °C), the battery will not charge. Deeply discharged batteries cannot be charged by the operator (faulty). Contact the manufacturer's customer service department.

NOTICE

Battery damage

The battery, battery charger (charging characteristic) and battery parameters must match; otherwise, the battery may be damaged during charging.

3.7.2 Activating the Lithium-Ion Battery

If the lithium-ion battery is not used for several hours, it switches to energy-saving mode to protect against deep discharge.

The lithium-ion battery can be reactivated by connecting it to the stationary battery charger, see page 52.

3.7.3 Intermediate charging

The lithium-ion battery can be partially charged (intermediate charging) each time there is a break in use, without limiting its service life. The following information must be borne in mind when carrying out intermediate charging of the lithium-ion battery.

NOTICE

Intermediate charging

A lithium-ion battery that is not fully discharged can be recharged at any time either in part of in full. In order to ensure the reliable operation of the lithium-ion battery, the following must be borne in mind:

- ▶ In the event of frequent intermediate charging, charge the lithium-ion battery fully every 4 weeks. If the battery charger has a “balancing” function, ensure that the balancing phase is completed at the end of charging. Further information on “balancing” can be found in the operating instructions for the battery charger.
- ▶ Turn off the battery charger before disconnecting the lithium-ion battery from the battery charger.

3.7.4 Partial charging, interrupting and re-starting charging

The charging process can be interrupted on the battery charger and continued as a partial charge. The charging process is automatically adapted to the charge status of the battery, see the operating instructions for the battery charger SLH 300i.

→ Charging continues automatically after a mains failure.

3.7.5 Trickle charging the lithium-ion battery

A fully charged lithium-ion battery can be connected to the battery charger for automatic trickle charging.

In the event of an extended period out of use, it is recommend that the trickle charge function of the battery charger be used in order to maintain the available capacity of the battery.

3.7.6 Charging the battery with a stationary battery charger

Only charge the lithium-ion battery with the manufacturer's stationary battery charger SLH 300i. Observe the battery charger operating instructions.

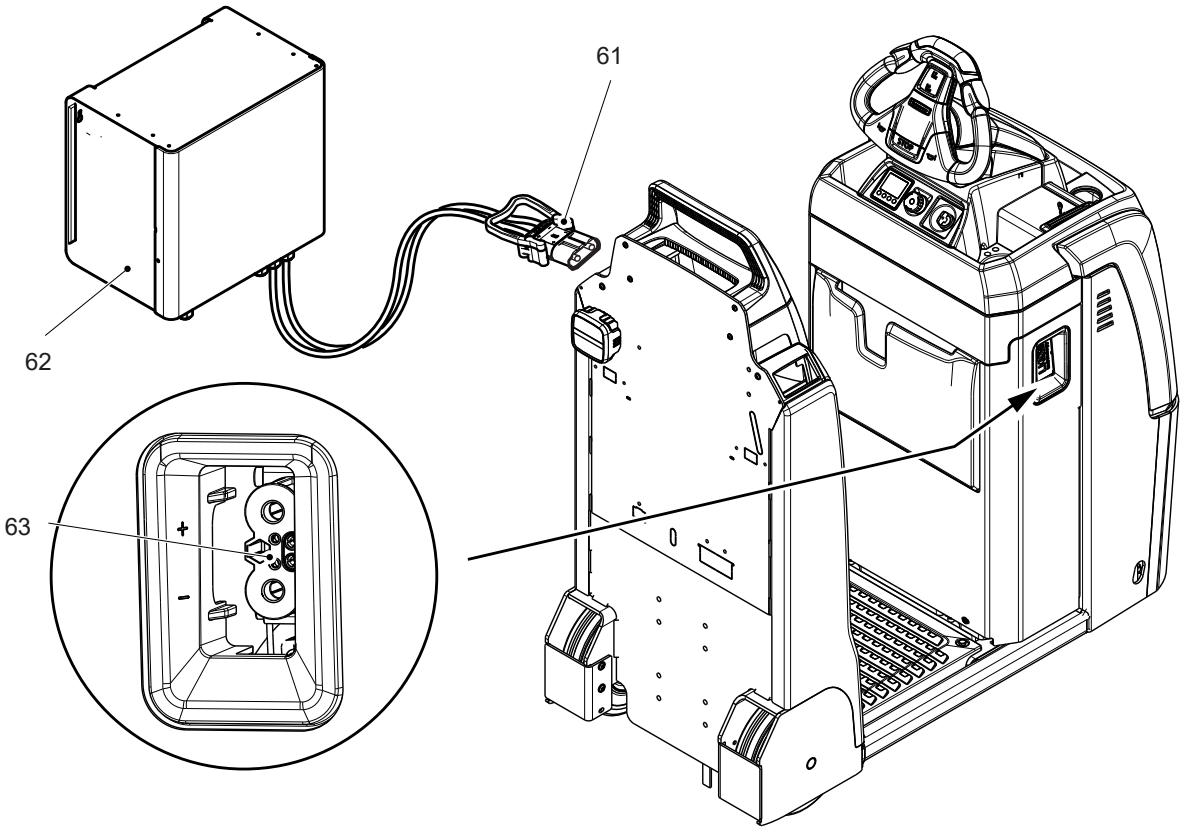

Charging the battery

Requirements

– The truck is parked securely, see page 75.
– The battery charger has been tested and is free of defects, see the operating instructions for the battery charger SLH 300i.
– The battery charger is connected to the power supply, but not yet turned on.
– Battery is exposed, see page 48.

Procedure

- Connect the charge connector (61) of the battery charger (62) to the charge connector (63) of the battery.
- Commence charging in accordance with the battery charger operating instructions.
- If the charge status is to be displayed:
  - Reset the emergency disconnect switch so that the control unit is powered up again, see page 80.
  - In this case, the truck should not be switched on.

The battery is now charged.

⚠ WARNING!

There is a danger of sparks if charging is improperly interrupted

Owing to the high charge currents, there is a risk of spark discharge if the charge connector is removed while charging is active. There is a risk of injury and of damage to the electrical contacts.

▶ Stop charging on the battery charger before removing the charge connector.

▶ Do not disconnect the mains cable or charge connector of the battery charger while charging (under load).

NOTICE

If charging has been interrupted, the full battery capacity will not be available.

Completing battery charging; restoring the truck to operation

Requirements

– The battery is partially or complete charged.

- Complete charging in accordance with the battery charger operating instructions.
- Disconnect the charge connector of the battery charger (61) from the charge connector (63) of the battery.
- Close the battery lid.

The truck is now ready for operation.

3.7.7 Charging the battery with an on-board charger

The process for charging the integrated modular lithium-ion battery with an on-board charger is analogous to the process for charging the replaceable batteries, see page 57.

4 Battery types

Depending on the model, the truck will be supplied with different battery types. The following table shows which combinations are included as standard:

Battery type	Capacity	Weight
24 volt battery 540x306x627 (l x w x h)	2 PzS 220 L-C	220 kg

The battery weights can be taken from the battery data plate. Batteries with non insulated terminals must be covered with a non slip insulating mat.

➔ The battery type used must match the truck controller's battery parameters.

➔ The truck can be fitted with a lithium-ion battery as an option; see the corresponding operating instructions.

5 Charging the battery

⚠ WARNING!

The gases produced during charging can cause explosions

The battery produces a mixture of nitrogen and hydrogen (electrolytic gas) during charging. Gassing is a chemical process. This gas mixture is highly explosive and must not be ignited.

- ▶ Switch the charging station and truck off first before connecting/disconnecting the charging cable of the battery charging station to/from the battery connector.
- ▶ The charger must be adapted to the battery in terms of voltage and charge capacity.
- ▶ Before charging, check all cables and plug connections for visible signs of damage.
- ▶ Ventilate the room in which the truck is being charged.
- ▶ The battery cover must be open and the battery cell surfaces must be exposed during charging to ensure adequate ventilation.
- ▶ Do not smoke and avoid naked flames when handling batteries.
- ▶ Wherever an industrial truck is parked for charging there shall be no inflammable material or lubricants capable of creating sparks within 2,5 m around the truck.
- ▶ Fire protection equipment must be on hand.
- ▶ Do not lay any metallic objects on battery.
- ▶ It is essential to follow the safety regulations of the battery and charger station manufacturers.

⚠ WARNING!

Danger due to damage to the on-board charger or live attachments

Damage to the on-board battery charger or live attachments (mains cable, plug) can cause a short circuit or electric shock.

- ▶ Do not trap the mains cable when closing the battery panel.
- ▶ Report any defects immediately to your supervisor.
- ▶ Notify the customer service department.
- ▶ Mark the defective truck accordingly and take it out of service.
- ▶ Do not return the truck to service until the fault has been identified and rectified.

NOTICE

Battery damage

The battery, battery charger (charging characteristic) and battery parameters must match; otherwise, the battery may be damaged during charging.

5.1 Charging the battery with a stationary battery charger

Charging the battery

Requirements

– Park the truck on a horizontal surface.
– The battery charger is switched off.
– Correct charging program set on the battery charger.

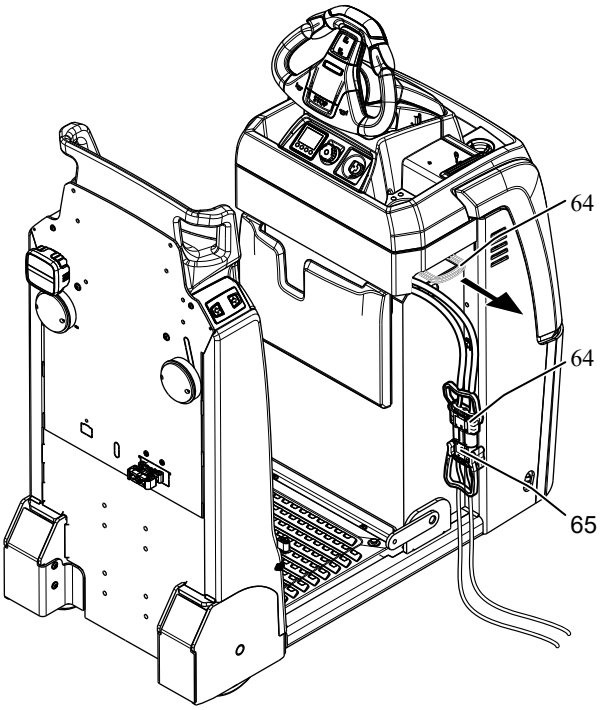

Procedure

- Disconnect the battery connector (64) from the truck.
- Remove any insulating mats from the battery.
- Connect the battery connector (64) to the charger cable (65) of the stationary charger.
- Start charging in accordance with the charger operating instructions.

The battery is charging.

Completing the battery charge

Requirements

– The battery is fully charged.

Procedure

- Complete charging in accordance with the battery charger operating instructions.
- Remove the battery connector (64) from the charger cable (65) of the stationary battery charger.
- Attach the battery connector (64) to the industrial truck.

Battery charging is complete.

5.2 Charging the battery with the integrated charger (○)

⚠ DANGER!

Risk of electric shock and fire

Damaged and unsuitable cables can cause electric shocks and can overheat, resulting in fires.

- ▶ Always use mains cables with a maximum length of 30 m. Local regulations must be observed.
- ▶ Unwind the cable reel fully when using it.
- ▶ Always use original manufacturer's mains cables.
- ▶ Insulation safety, acid and caustic ratings must comply with the manufacturer's mains lead.
- ▶ The charging connector must be dry and clean when used.

⚠ WARNING!

Moving of a connected industrial truck with the mains socket switched off

If an industrial truck is being charged at an external mains socket, the automatic immobiliser detects this process and deactivates the truck travel functions. When charging an industrial truck at a mains socket that can be switched off, the industrial truck can start moving when the socket is switched off because the immobiliser detects only live mains sockets. This can cause damage to the electrical building installation as well as electric shocks and electrically induced fires.

- ▶ Before commissioning the truck, disconnect the mains cable from the mains socket and stow away in the designated position on the truck.
- ▶ If no additional protection measures are taken, the truck must not be charged via the on-board charger using a mains socket that can be switched off.
- ▶ This warning must be taken into account during the risk analysis performed by the operating company.

NOTICE

Improper use of the on-board charger can cause material damage

If faulty, contact the manufacturer's customer service department.

- ▶ The battery charger must only be used for batteries supplied by Jungheinrich or other approved batteries provided it has been adapted by the manufacturer's customer service department.

5.2.1 Setting the charging characteristic

The charging characteristic is set via parameters from the truck software.

The setting is made at the factory or by the manufacturer's customer service department.

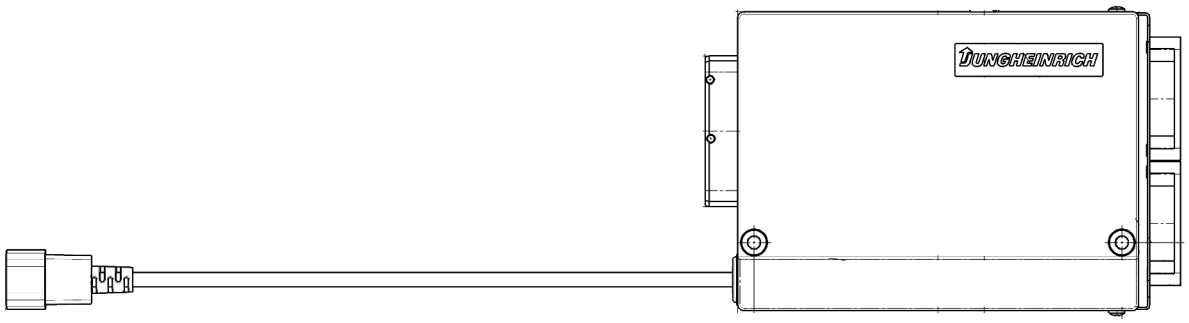

5.2.2 Charging the battery

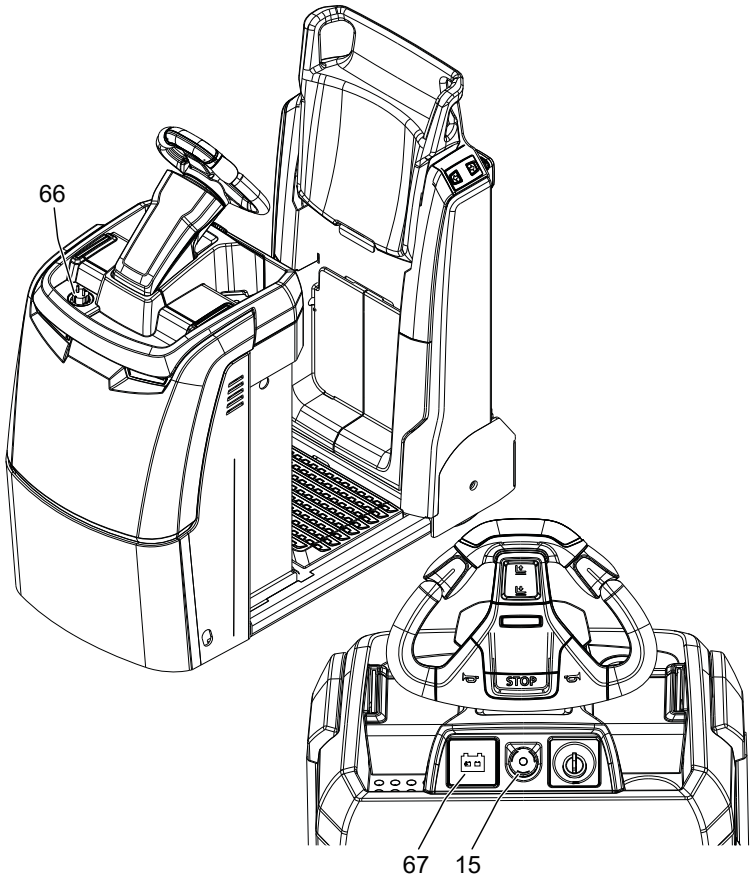

Mains connection of the on-board charger

Description	Mains voltage	Mains frequency
ELH on-board charger (○)	230 V	50 Hz

The mains cable and mains connector (66) of the battery charger are integrated with the storage compartment in the dashboard panel.

Charging the Battery

Requirements

– Truck parked securely – see page 75.

Procedure

- Remove any insulating mats from the battery.
- The battery connector must remain plugged in.
- Plug the mains connector (66) into a mains socket.
- Pull up the emergency disconnect switch (15).

  The charge status indicator (67) displays the charge status or a fault, see page 61.

The battery is charged.

➔ As long as the mains connector (66) is attached to the mains, all the truck's electrical functions are disconnected (electric immobiliser). The truck cannot be operated.

Ending the charging process

- Remove the mains plug (66) from the mains socket and stow it fully in the storage compartment on the truck along with the mains cable.

Charging complete.

➔ If the charging process is interrupted, the full battery capacity will not be available.

Charging times

The duration of charge depends on the battery capacity.

➔ Charging continues automatically after a mains failure. Charging can be interrupted by removing the mains connector and continued as partial charging.

Partial charging

Charging can be interrupted on the battery charger and continued as partial charging. The charging process is automatically adapted to the charge status of the battery; see the operating instructions for the battery charger. This keeps battery wear to a minimum.

Trickle charge

The trickle charge starts automatically when charging is complete.

6 Charge Status Indicator

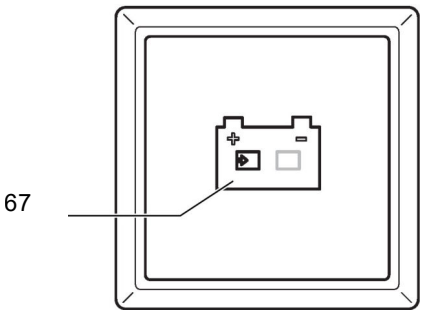

The charge status indicator (67) uses two LEDs to display the battery charge status.

Green LED (charge status)	
Lit	Charging complete, battery full. (Pause in charging, trickle charge or compensation charging).
Slow flash	Charging.
Rapid flash	Displayed when a charge begins or after setting a new characteristic curve. Number of flash pulses corresponds to the characteristic curve set.

Red LED (fault)	
Lit	Overtemperature. Charging is interrupted.
Slow flash	Safety charging time exceeded. Charging is cancelled. Mains interruption required to begin charging again.
Rapid flash	Characteristic-curve setting is invalid.

7 Removing or installing the battery

⚠ WARNING!

Accident risk during battery removal and installation

Due to the battery weight and acid there is a risk of trapping or scalding when the battery is removed and installed.

- ▶ Note the "Safety regulations for handling acid batteries" section in this chapter.
- ▶ Wear safety shoes when removing and installing the battery.
- ▶ Use only batteries with insulated cells and terminal connectors.
- ▶ Park the truck on a level surface to prevent the battery from sliding out.
- ▶ Make sure the crane slings have sufficient capacity to replace the battery.
- ▶ Use only approved battery replacement devices (battery roller stand, replacement trolley etc.).
- ▶ Make sure the battery is securely located in the truck's battery compartment.

⚠ CAUTION!

Trapping hazard

Trapping hazard when removing and installing the battery.

- ▶ When removing and installing the battery do not put your hands between the battery and the chassis.

Removing the battery from the side

Battery removal

Requirements

– Park the truck securely, see page 75.

Tools and Material Required

– Battery replacement station/trolley

Procedure

- Loosen the battery latch (68) in the travel direction and remove it.
- Move the battery replacement station/trolley up to the side of the truck.
- Disconnect the battery connector (64) from the truck connector.
- Carefully push the battery off the truck onto the battery replacement station/trolley.

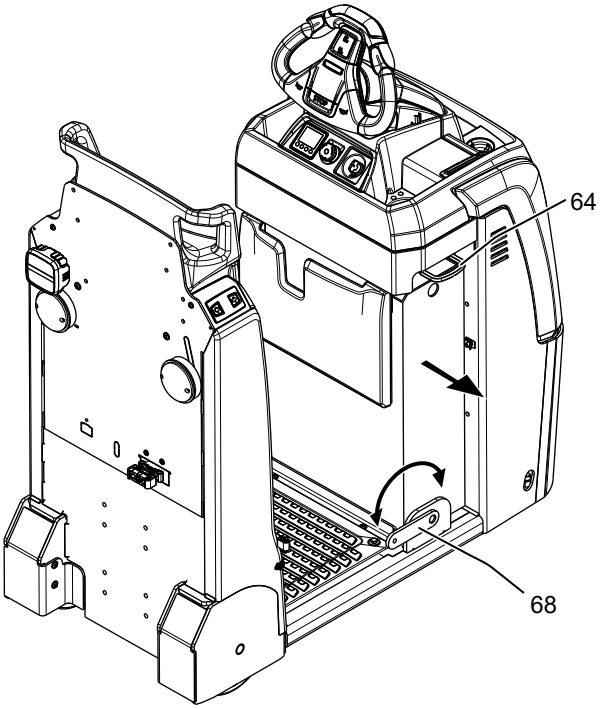

The battery has now been removed.

Battery installation

Requirements

– Park the truck securely, see page 75.

Procedure

➔ Installation is in the reverse order. When reinstalling a battery, make sure that it is installed in the correct position and properly connected.

⚠ CAUTION!

▶After installing the battery make sure the battery cannot slide out.

E Operation

1 Safety Regulations for the Operation of Forklift Trucks

Driver authorisation

The truck may only be used by suitably trained personnel, who have demonstrated to the proprietor or his representative that they can drive and handle loads and have been authorised to operate the truck by the proprietor or his representative.

Operator’s rights, responsibilities and rules of conduct

The driver must be informed of his duties and responsibilities and be instructed in the operation of the truck and shall be familiar with the operating instructions. Safety shoes must be worn on pedestrian-operated trucks.

Do not allow unauthorised persons to use the truck

The operator is responsible for the truck during the time it is in use. The operator must prevent unauthorised persons from driving or operating the truck. Do not carry passengers or lift other people.

When leaving the industrial truck, the operator must ensure that the industrial truck is secured against unauthorised use, e.g. remove the key or keep the access code secret.

Damage and defects

The supervisor must be informed immediately of any damage or faults to the truck or attachment. Trucks which are unsafe for operation (e.g. wheel or brake problems) must not be used until they have been rectified.

Repairs

The operator must not carry out any repairs or alterations to the truck without authorisation and the necessary training to do so. The operator must never disable or adjust safety mechanisms or switches.

Hazardous area

⚠ WARNING!

Risk of accidents / injury in the hazardous area of the truck

The hazardous area is defined as the area in which people are at risk from the truck movement or from the load itself. This also includes areas which can be reached by falling loads.

- ▶ Instruct unauthorised people to leave the hazardous area.
- ▶ Give a warning signal with plenty of time for people to leave.
- ▶ If unauthorised personnel are still within the hazardous area stop the truck immediately.

⚠ WARNING!

The use of mobile phones can result in lack of attention and ultimately accidents

Using a mobile phone while operating the truck can result in accidents.

- ▶ Observe national regulations on the use of mobile phones while operating the truck.

Safety devices, warning signs and warning instructions

Safety devices, warning signs (see page 26) and warning instructions in the present operating instructions must be strictly observed.

2 Displays and Controls

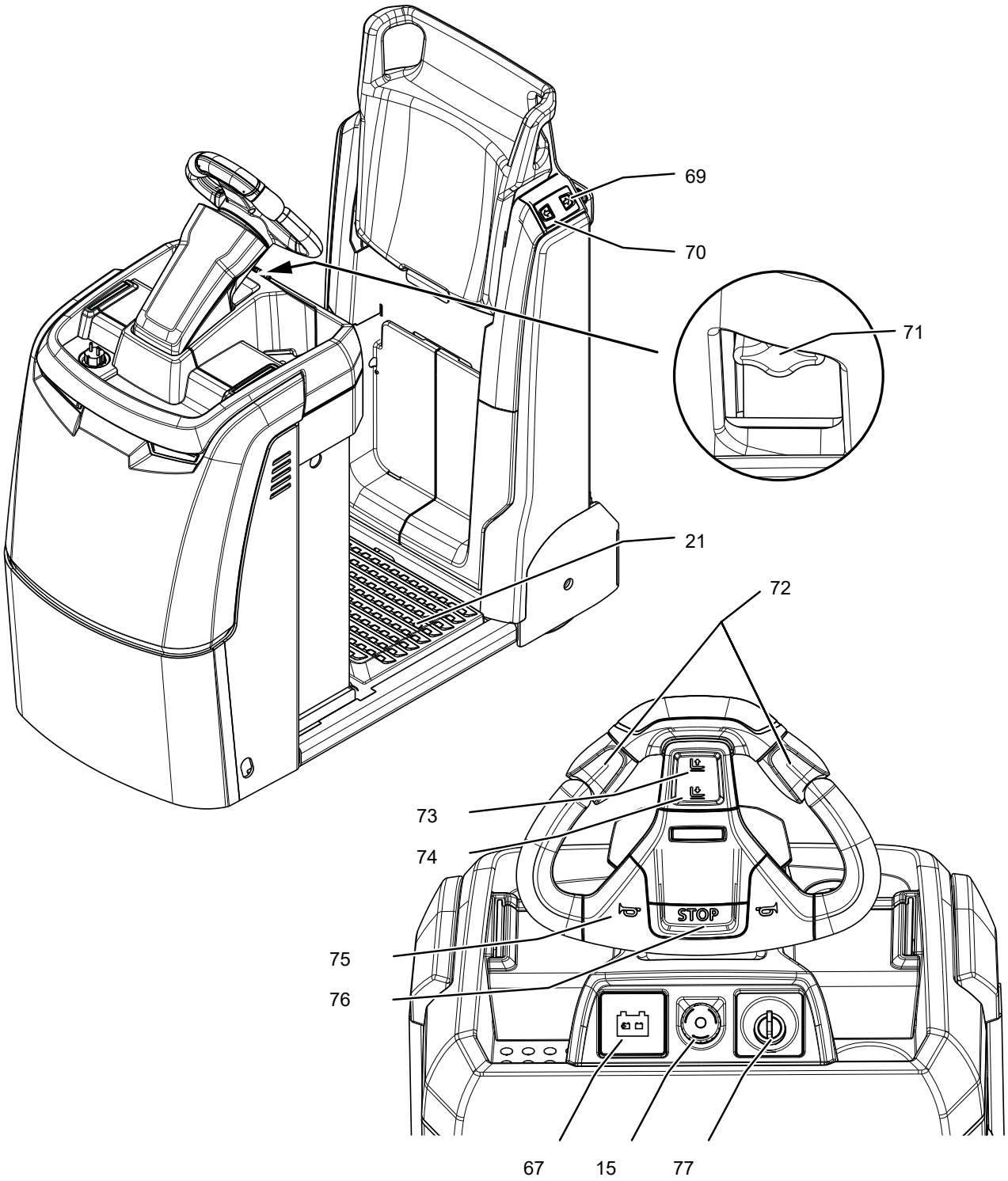

Item	Control/display		Function
69	Reverse "pedestrian operation" button	○	– The truck travels in reverse in pedestrian mode (slow travel)
70	Forward "pedestrian" button	○	– The truck travels forwards in pedestrian mode (slow travel)
71	jetPILOT adjuster	●	– Sets the jetPILOT to the desired height.
21	Operator platform	●	Released (without load): – Travel inhibited, truck can only move in pedestrian mode. Actuated (with load): – Travel enabled. – Pedestrian mode inhibited.
72	Travel switch	●	– Controls the travel direction and speed.
73	Lift button	○	– Trailer lift function.
74	Lower button	○	– Trailer lower function.
75	Horn button	●	– Activates a warning signal.
76	Stop button	●	– The truck decelerates at the maximum rate until it comes to a halt.

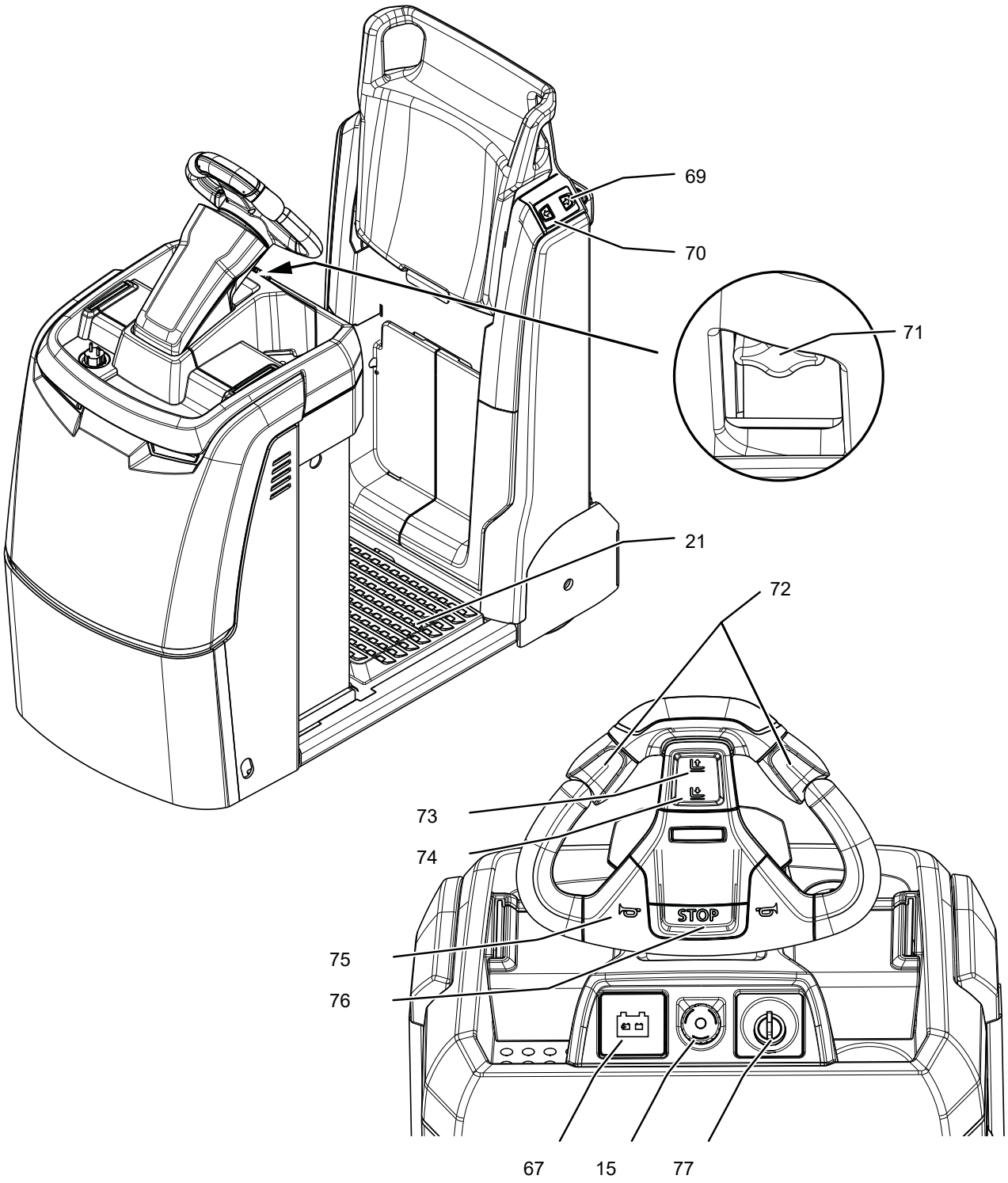
69
70
71
21
72
73
74
STOP
75
76
67
15
77

Item	Control/display		Function
67	Charge status indicator	●	– Indicates the charge/discharge status of the battery.
	Display unit (2" display)	○	Display for: – Battery charge status – Battery capacity – Service hours – Travel program – Warning indicators – Event messages
	Soft keys under the display unit	○	Selection of – Travel program – Crawl speed – Options
		○	Replaces the key switch – Truck release by entering master and access code
15	Emergency disconnect switch	●	– Switches control current on and off. Removing the key prevents the truck from being switched on by unauthorised personnel.
77	Key switch and key	●	– Switches the truck on.
	ISM access module	○	
	Keypad	○	
	Transponder	○	

2.1 Battery discharge indicator

After the truck has been started, the charge status of the battery is shown. The LED (78) colours represent the following conditions:

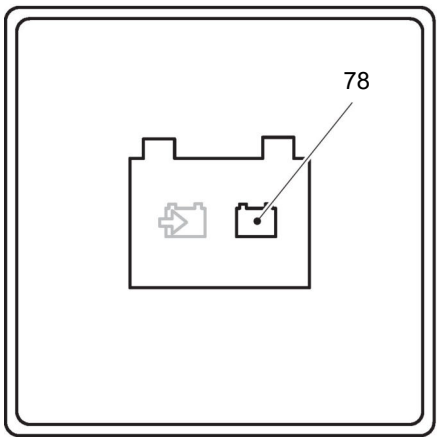

LED colour	Charge status
Green	40 - 100%
Orange	30 - 40 %
Green/orange flashes 1 Hz	20 - 30 %
Red	0 - 20 %

If the LED is lit red, load can no longer be lifted. Lifting is only enabled when the battery connected is at least 70% charged.

If the LED flashes red and the truck is not ready for operation, inform the manufacturer's customer service department. Red flashing is a truck controller code. The flashing sequence indicates the type of fault.

2.2 Battery discharge monitor

The standard setting for the battery discharge indicator / discharge monitor is based on standard batteries. When using maintenance-free batteries or special batteries, the display and cut-off points of the battery discharge monitor must be set by the manufacturer's customer service department. If this setting is not configured, the battery may be damaged due to deep discharge.

If the battery charge falls below the residual capacity level, the travel speed is reduced to half the setting. An alternating display (78) appears. The full travel speed is only released again when the battery connected is at least 70% charged.

3 Starting up the truck

3.1 Checks and Operations to Be Performed Before Starting Daily Work

⚠ WARNING!

Damage and other truck or attachment (optional equipment) defects can result in accidents.

If damage or other truck or attachment (optional equipment) defects are discovered during the following checks, the truck must be taken out of service until it has been repaired.

▶ Report any defects immediately to your supervisor.

▶ Mark defective truck and take out of service.

▶ Do not return the industrial truck to service until you have identified and rectified the fault.

Inspection before daily operation

Procedure

- Check the whole of the outside of the truck for signs of damage and leaks. Damaged hoses must be replaced immediately.
- Check operator position for damage.
- Check that the battery is securely mounted and that the cable connections are free of damage and firmly secured.
- Check the battery connector is secure.
- Check the wheels for damage.
- Check that the markings and labels are all present and legible (see page 26).
- Check the panels and covers are secure and check for damage.
- Check the optional equipment for damage and make sure it is secure.

3.2 Preparing the truck for operation

Switching on the truck

Requirements

– Checks and operations to be performed before starting daily work, see page 72.

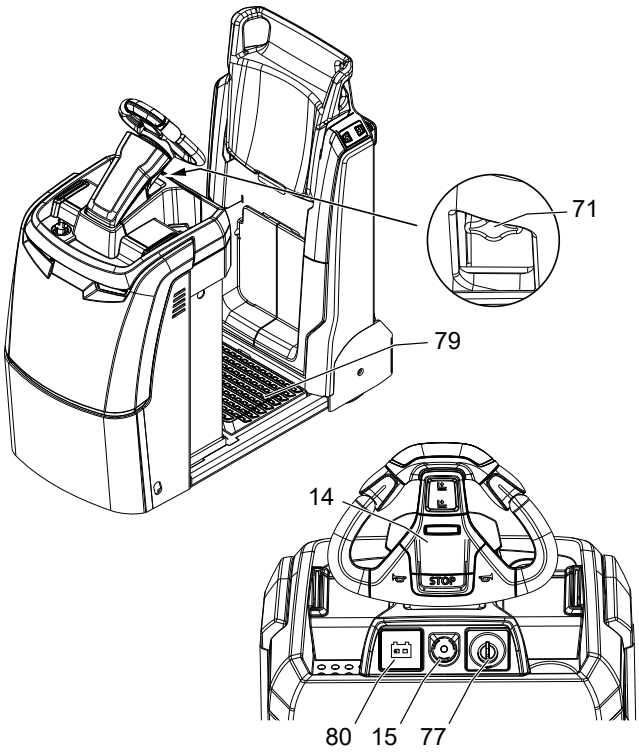

Procedure

- Stand on the platform (79) or fold the driver's seat (○) down and after standing on the platform sit down on the folded-out driver's seat.
- Loosen the jetPILOT adjuster (71) and set the jetPILOT (14) to the desired height. Then release the jetPILOT adjuster.
- Turn the emergency disconnect switch (15) to unlock it.
- Switch on the truck. To do this:
  - Insert the key in the key switch (77) and turn it as far right as it will go.
  - Use the keyless access system (○), see page 108.
  - Hold the card or transponder in front of the ISM access module (○) and, depending on the setting, press the green button on the ISM access module.

The truck is ready for operation.

➔ The charge status indicator (80 (●)) shows the available battery capacity.

⚠ CAUTION!

Accidental truck movement can cause injury

Do not operate the travel switch or a touch mode button (○) when entering or exiting the stand-on platform.

3.3 Visual inspections and activities to be performed after establishing operational readiness

⚠ WARNING!

Risk of accident due to damage to or other defects in the truck and optional features

If damage or other truck or attachment (optional equipment) defects are discovered during the following checks, the truck must be taken out of service until it has been repaired.

▶ Report any defects immediately to your supervisor.

▶ Mark defective truck and take out of service.

▶ Do not return the industrial truck to service until you have identified and rectified the fault.

Procedure

- Test warning indicators and safety equipment:
  - Test the emergency disconnect function by pressing the emergency disconnect switch. The main circuit is disconnected and no truck operations can be performed. Now pull the emergency disconnect switch to unlock it.
  - Test the horn by pressing the "warning signal" button (75).
  - Test the brakes, see page 82.
  - Test the steering, see page 89.
  - Test the travel functions, see page 85.
- Test the controls and displays and check for damage, see page 67.
  - Check the controls automatically return to the neutral position after actuation.

3.4 Parking the truck securely

⚠ WARNING!

An unsecured truck can cause accidents

Parking the truck on an incline is dangerous and is strictly prohibited.

▶ Always park the truck on a level surface. In special cases the truck may need to be secured with wedges.

Parking the truck securely

Procedure

- Park the truck on a level surface.
- Switch off the truck. To do this:
  - Turn the key in the key switch (77) anti-clockwise as far as it will go. Remove the key from the key switch (77).
  - Press the red key on the ISM access module (○).
- Press the emergency disconnect switch (15).

The truck is parked.

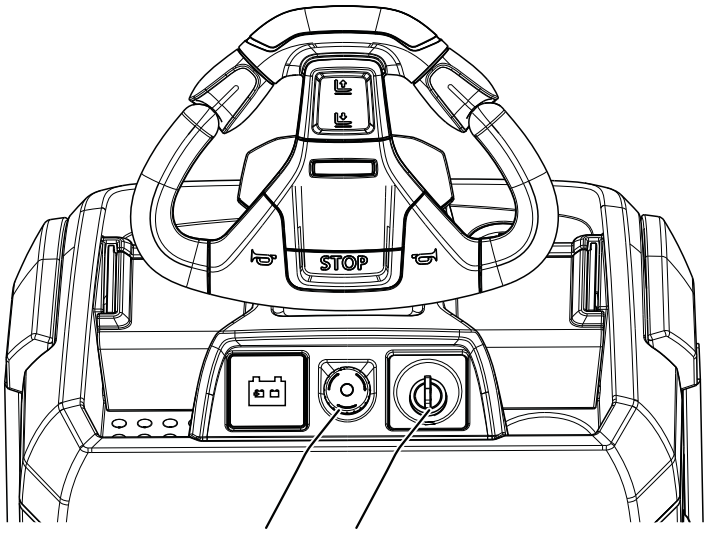

4 Working with the truck

4.1 Safety regulations for travel mode

Travel routes and work areas

Only use lanes and routes specifically designated for truck traffic. Unauthorised third parties must stay away from work areas. Loads must only be stored in places specially designated for this purpose.
The truck must only be operated in work areas with sufficient lighting to avoid danger to personnel and materials. Additional equipment is necessary to operate the truck in areas of insufficient lighting.

⚠ DANGER!

Do not exceed the permissible surface and point loading on the travel lanes.
At blind spots get a second person to assist.
The driver must ensure that the loading dock /dock leveller cannot be removed or come loose during loading/unloading.

Travel conduct

The operator must adapt the travel speed to local conditions. The truck must be driven at slow speed when negotiating bends or narrow passageways, when passing through swing doors and at blind spots. The operator must always observe an adequate braking distance between the forklift truck and the vehicle in front and must be in control of the truck at all times. Abrupt stopping (except in emergencies), rapid U turns and overtaking at dangerous or blind spots are not permitted. Do not lean out or reach beyond the working and operating area.

Visibility when driving

The driver must look in the direction of travel and must always have a clear view of the route ahead.

Negotiating slopes and inclines

Negotiating slopes or inclines is only permitted if they are specifically designed as travel routes, are clean and have a non-slip surface and providing they can be safely travelled along in accordance with the truck's technical specifications. The industrial truck must not be turned, operated at an angle or parked on inclines or slopes. Inclines must only be negotiated at slow speed, with the driver ready to brake at any moment.

Negotiating lifts, loading ramps and docks

Lifts may only be negotiated if they have sufficient capacity, are suitable for driving on and authorised for truck traffic by the owner. The driver must satisfy himself of the above before entering these areas. The truck must enter lifts with the load in front and must take up a position which does not allow it to come into contact with the walls of the lift shaft. Persons riding in the lift with the forklift truck must only enter the lift after the truck has come to a rest and must leave the lift before the truck. The driver must ensure that the loading ramp / dock cannot move or come loose during loading / unloading.

Towing trailers

Do not exceed the maximum trailer load specified for the industrial truck for trailers with or without brakes. The trailer load must be correctly secured and must not exceed the dimensions permitted for the travel paths. After coupling and before starting to travel, the driver must ensure that the trailer coupling cannot become detached. Industrial trucks towing a load must be operated so as to ensure that the trailer travels safely and can be braked safely under any conditions.

Driving in bends

When driving in bends, the operator must significantly reduce speed and only accelerate again when the entire tugger train has left the bend. Failure to do so results in the trailers that are still in the bend accelerating excessively.

Nature of the load to be carried on the loading platform

The operator must make sure that the load is in a satisfactory condition. Loads must always be positioned safely and carefully. Use suitable precautions, e.g. securing to the lashing rings, to prevent parts of the load from tipping or falling down.

⚠ WARNING!

Wind loads

When transporting large loads, wind forces can influence the tugger train's stability. If light loads are exposed to wind forces, they must be particularly well secured. Stop the truck in both cases if necessary.

⚠ WARNING!

Removing or disabling safety devices can cause accidents

Removing or disabling safety devices such as the emergency disconnect switch, panels etc. can result in accidents and injury.

- ▶ Report any defects immediately to your supervisor.
- ▶ Defective tugger trains or trailers must be taken out of service and labelled accordingly.
- ▶ Do not return the tugger train to service until you have identified and rectified the fault.

⚠ WARNING!

Electromagnetic influence can result in accidents

Strong magnets can cause electronic components such as Hall sensors to become damaged, resulting in accidents.

- ▶ Do not use magnets in the operating area of the truck. Exceptions to this rule are commercial, weak clamping magnets for attaching notices.

Do not park the truck in escape routes, aisles, or in access areas to stairways or safety equipment.

When parking a truck near railway tracks, no part of the truck should be closer than 2 m from the nearest railway track.

4.2 Emergency Disconnect

⚠ CAUTION!

Applying maximum braking can result in accidents

Applying the emergency disconnect switch during travel will cause the truck to decelerate to a halt at maximum force. This may cause the load to slide off the trailer. There is a higher risk of accidents and injury.

- ▶ Do not use the Emergency Disconnect switch as a service brake.
- ▶ When travelling, only use the emergency disconnect switch in the event of danger.

⚠ CAUTION!

Faulty or non-accessible Emergency Disconnect switches can cause accidents

A faulty or non-accessible Emergency Disconnect switch can cause accidents. In dangerous situations the operator cannot bring the truck to a halt in time by applying the Emergency Disconnect switch.

- ▶ The operation of the Emergency Disconnect switch must not be affected by any objects placed in its way.
- ▶ Report any defects on the Emergency Disconnect switch immediately to your supervisor.
- ▶ Mark defective truck and take out of service.
- ▶ Do not return the industrial truck to service until you have identified and rectified the fault.

Press the Emergency Disconnect switch

Procedure

- Press the Emergency Disconnect switch (15).

All main electrical functions are deactivated. The truck brakes to a halt.

➔ *When you press the Emergency Disconnect switch electric steering is cut out. Steering functions are disabled until the system is reset.*

Releasing the emergency disconnect switch

Procedure

- Turn the emergency disconnect switch (15) to unlock it.

All electrical functions are enabled and the truck is operational again (provided the truck was operational before the emergency disconnect switch was pressed).

➔ If the truck is not equipped with a key switch, the truck is not operational after the emergency disconnect switch has been released. Prepare the truck for operation, see page 73.

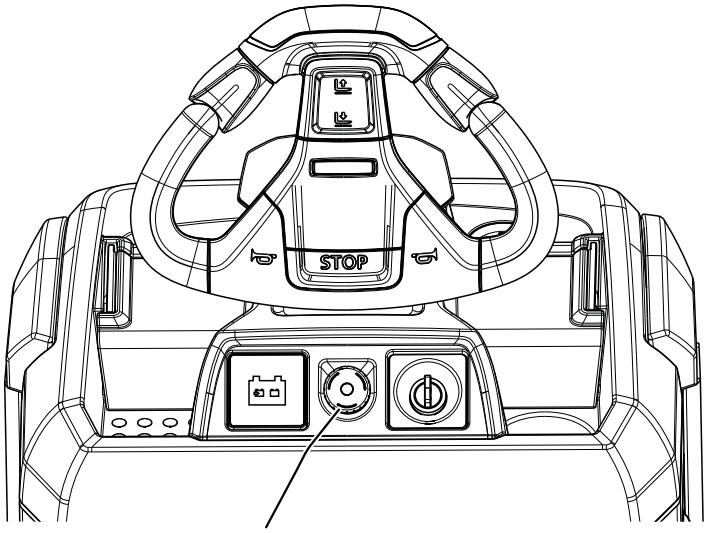

15

4.3 How to act in hazardous situations

⚠ WARNING!

If the truck is in danger of tipping over or falling off a ramp, proceed as follows.

▶Abandon the truck.

When travelling on a loading ramp, avoid large steering movements and slow down.

4.4 Brakes

⚠ WARNING!

Accident risk

The brake pattern of the truck depends largely on the ground conditions.

▶The operator must take into account the travel route conditions when braking.

▶Brake with care to prevent the load from slipping.

▶Allow for increased braking distance when travelling with an attached load.

▶Use the service brake in emergencies.

The truck can be braked in the following ways:

– Regeneratively using the service brake (stop button)
– Regeneratively using the coasting brake
– With the inversion brake (by reversing the travel direction via the travel switch)
– In emergencies: using the emergency disconnect switch – see page 80.

4.4.1 Braking with the service brake

Procedure

- Press the stop button (76).

The truck decelerates regeneratively via the service brake for as long as the button is pressed.

Optionally, the truck brakes to a halt regeneratively via the service brake when the stop button is pressed.

➔ *When braking regeneratively, energy is returned to the battery, ensuring a longer service time.*

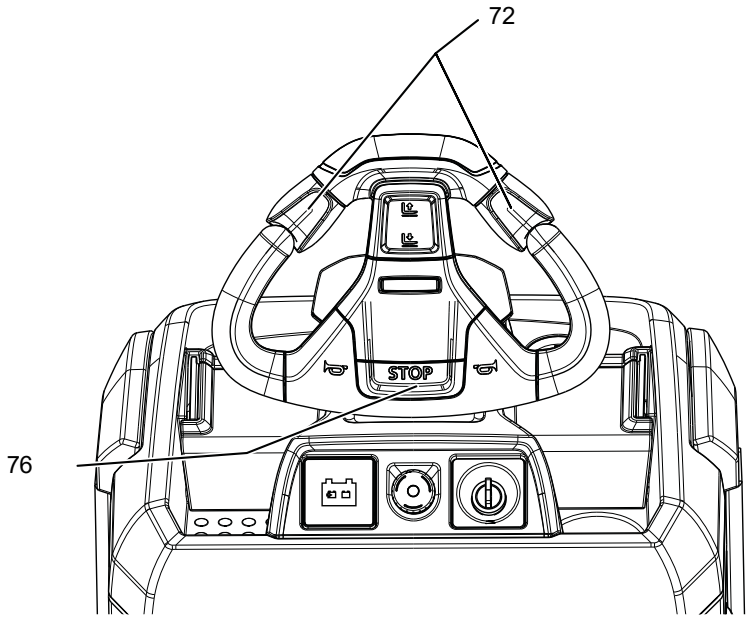

4.4.2 Braking with the coasting brake

Procedure

- Release the travel switch (72).

The travel switch returns to the neutral position.

The truck brakes to a halt regeneratively via the coasting brake. The service brake is then applied.

➔ *The coasting brake may not be sufficient on inclines. In this case, the truck must be braked using the service brake.*

4.4.3 Inversion braking

Procedure

- Set the travel switch (72) to the opposite travel direction during travel – see page 87.

The truck decelerates until it starts to travel in the opposite direction.

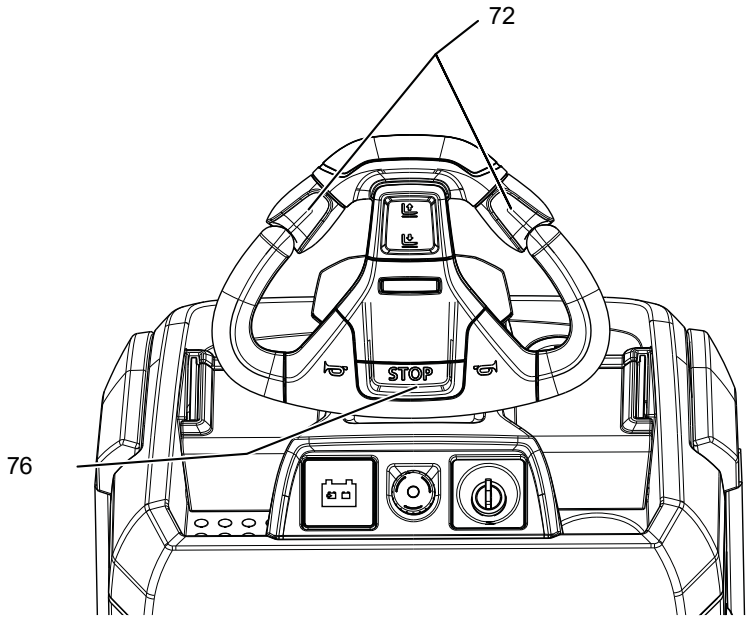

4.4.4 Parking brake

After a set delay, the mechanical brake automatically applies when the truck stops.

The default setting can be changed by the manufacturer's customer service department.

4.5 Travel

⚠ WARNING!

Collision hazard when operating the truck

Collisions with personnel and equipment can result if the truck is operated with open panels and covers.

▶ Do not operate the truck unless the panels and covers are closed and properly locked.

Requirements

– Commission the truck, see page 72.
– Trailer lifted (○)

Procedure

- Step onto the operator platform (79).
- Control the travel direction with the travel switch (72):
  - Rotating the travel switch (72) slowly downwards:
    Travel in the load direction (R).
  - Slowly turn the travel switch (72) up:
    Travel in the drive direction (F).
- Control the travel speed with the travel switch (72):
  - The further the travel switch (72) is rotated, the greater the travel speed.
- Control the travel speed by rotating the travel switch (72) further forward or back.

➔ Hand change: Rotating the second travel switch (72) in the same direction allows you to release the first travel switch (72) without decelerating the truck.

➔ After releasing the travel switch (72), it automatically returns to the neutral position (0), and the truck brakes.

➔ For trucks with "pedestrian mode" (○), the truck can be operated at reduced speed (slow travel) without standing on the operator platform, see page 90.

The brakes are released, and the truck moves in the selected direction.

➔ For travel without a coupled trailer, the truck must have a trailer interface (○) with the status "trailer lifted". Lift the trailer.

➔ For the travel release (○) option, the final connector must be inserted into the truck interface when the trailer is lifted.

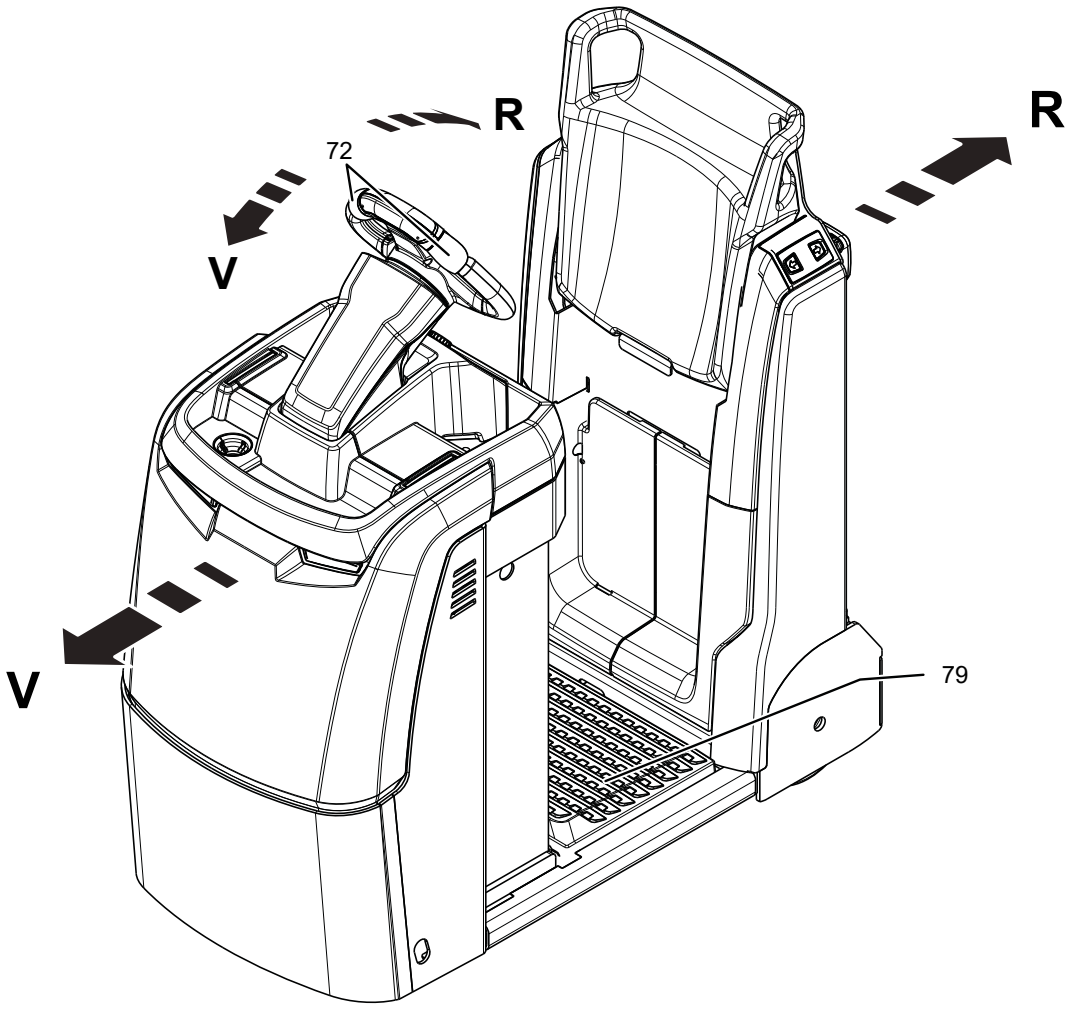
R
R
72
V
V
79

4.5.1 Changing the direction of travel

⚠ CAUTION!

Danger when changing direction during travel

Changing direction during travel causes the truck to decelerate sharply. When the truck changes direction it can start travelling at high speed in the opposite direction unless the accelerator pedal is released in time.

- ▶When the truck starts to move in the opposite direction, only depress the accelerator pedal lightly or not at all.
- ▶Do not make any abrupt steering movements.
- ▶Look in the direction of travel.
- ▶Have an adequate overview of the route to be travelled.

Changing direction during travel

Procedure

- Set the travel switch (72) to the opposite direction while travelling.

The truck decelerates until it starts to travel in the opposite direction.

4.6 Operator platform

For rider mode you must stand on the platform (79) or after standing on the platform sit down on the fold-out driver's seat (○) before applying the travel switch.
Pedestrian mode is an exception, see page 90.

The platform is monitored by the controller and must be discharged by vacating it after a maximum period of 60 minutes when the truck is stationary.

➔ If the set time is exceeded the truck can only be operated at a maximum reduced speed of 2,5 km/h (slow travel).

4.7 Steering

When the jetPILOT is released it rotates automatically to the centre position of forward travel.

⚠ WARNING!

Faulty JetPilots can result in collision

Operating the truck with a faulty JetPilot can result in collisions with other people and objects.

▶ If the JetPilot returns to the centre position slowly or not at all when released, the truck must be taken out of service until the cause of this fault is be rectified.

▶ Contact the manufacturer's customer service department.

Procedure

- Turn the jetPILOT to the left or right.

The truck is steered in the required direction.

Both travel switches of the jetPILOT are ergonomically designed so that they can be operated both with the left and right hand for travel and steering.

4.8 Pedestrian mode (○)

⚠ CAUTION!

Trapping hazard from the truck during pedestrian mode

In pedestrian mode the truck can pose a trapping hazard for the operator and other people.

- ▶ Wear personal protective equipment (e.g. safety shoes, ...).
- ▶ The operator must always stand beside the truck during pedestrian operation.
- ▶ The truck must be operated with particular care and attention in pedestrian mode.
- ▶ Ensure there are no other people standing between the truck and obstacles when operating in pedestrian mode.
- ▶ Steering set straight-ahead.
- ▶ Ensure that nobody is riding on the operator platform when operating in pedestrian mode.

In pedestrian mode, the truck can be operated by the operator from either side while walking alongside. The maximum speed is significantly reduced.

⚠ CAUTION!

Danger from inadequately secured load

The truck can also be moved in pedestrian mode with the trailer lowered. In this case, an adequately secured load cannot be guaranteed.

- ▶ Travel with caution.
- ▶ Secure the load adequately.

Travel using the “Pedestrian” button

Procedure

- Press the “Pedestrian” button (70,69).

➔ When you travel using the "Pedestrian" button (70,69) you can steer between +/- 10° left and right. If you steer beyond this range, the truck will stop.

The truck travels at a preset reduced speed 300 mm in the chosen direction each time the button is pressed.

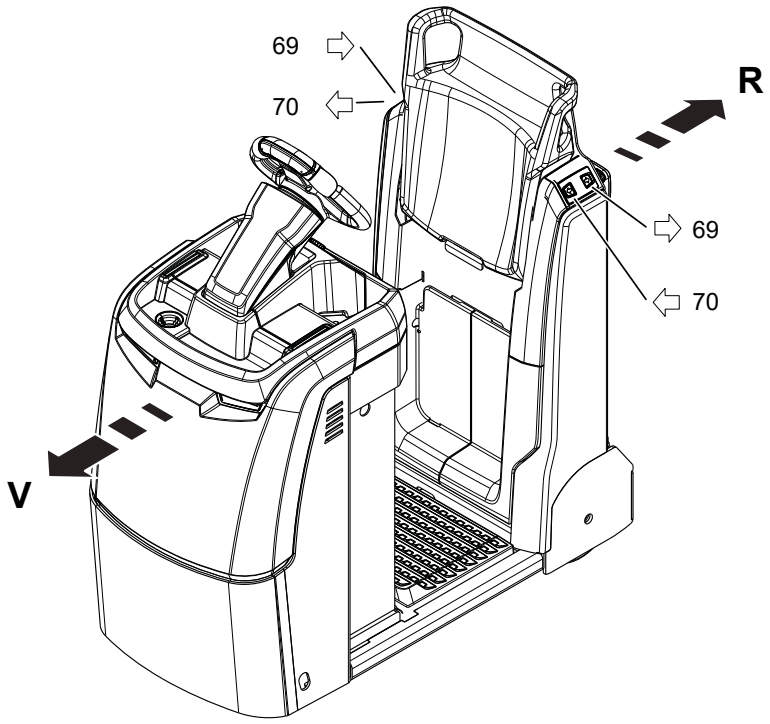

4.9 Travelling with trailers

⚠ WARNING!

Towed load

In difficult application conditions (inclines, smooth or slippery travel routes) the tow load must have to be reduced to ensure braking without risk of accidents. The maximum load specified applies only for towing on level, non-slip ground with sufficient capacity.
For tow loads in excess of 2000 kg and on hazardous routes the use of braked trailers is recommended.

⚠ WARNING!

Wind loads

Wind forces can affect the stability of a truck when transporting loads with large surface areas. Light loads must be especially secured when they are subjected to wind forces. Stop the truck in both cases.

⚠ CAUTION!

Cornering with trailers

When cornering with long trailers and trailer trains always apply a large radius as the trailer follows the truck in a small radius.

Travelling with a trailer

Requirements

– Familiarise yourself with the brake and steering system of the trailer before travelling.

Procedure

- Set off slowly until the trailer coupling has become taut.
- Then gradually increase the speed to normal travel speed.

Stopping with a trailer

Procedure

- Reduce the speed so that both tow truck and trailer gradually slow down.
- Brake carefully.

5 Troubleshooting

This chapter allows operators to identify and rectify simple faults or the results of incorrect operation themselves. When trying to locate a fault, proceed in the order shown in the remedy table.

➔ If, after carrying out the following remedial action, the industrial truck cannot be restored to operation or if a fault in the electronics system is displayed with a corresponding error message, contact the manufacturer's customer service department.
Subsequent troubleshooting must only be performed by the manufacturer's customer service department. The manufacturer has a customer service department specially trained for these tasks.
In order for customer services to react quickly and specifically to the fault, the following information is essential:
- Truck serial number
- Event message on the display unit (if present)
- Error description
- Current location of truck.

5.1 Truck does not start

Possible cause	Actions
Battery connector not inserted	Check the battery connector and plug it in if necessary
Emergency disconnect switch pressed	Release emergency disconnect switch
Key switch set to "O"	Set the key switch to I
Battery charge too low	Check the battery charge and charge battery if necessary
Faulty fuse	Check fuses
Incorrect code entered in display unit (○)	Enter correct code, see page 112
Incorrect code entered in keypad (○)	Enter correct code, see page 117
Incorrect transponder used on transponder reader (○)	Use correct transponder, see page 122
Incorrect transponder used on ISM access module (○)	Use correct transponder, see page 142
The stop button is not in the neutral position (E1914) when the truck is switched on	Do not press the stop button
Lift/lower rocker is not in the neutral position (E2951) when truck switched on.	Do not press the lift/lower rocker button.
The travel switch is not in the neutral position (E1901) when the truck is switched on	Do not press the travel switch
The lateral pedestrian mode is active when the truck is switched on (E1925)	Do not press the lateral pedestrian mode button
The lateral pedestrian mode is active for both travel directions (E1906)	Activate lateral pedestrian mode for just one travel direction at a time.
The travel switch and pedestrian mode button are pressed at the same time during operation (E1906)	Concurrent operation is not permissible. Either the travel mode or the pedestrian mode may be used at any one time.
Operating sequence not observed, (the platform must be occupied before the travel switch can be applied) (E1908)	Follow the operating sequence

5.2 Truck does not move - with electrical trailer interface

Possible cause	Action
Trailer not lifted – "Trailer travel release" symbol lights up red	Lift trailer
Final connector not inserted – "Trailer travel release" symbol lights up red	– Insert final connector – Lift trailer
Trailer signal error	Activate recovery function, see page 142. This is only a temporary action.

5.3 Truck operates only in slow travel in rider mode

➔ At slow travel the travel speed is restricted to 2,5 km/h.

Possible cause	Action
The operator platform was not discharged in time (presetting 60 minutes) (E0943)	Discharge the operator platform when the truck is stationary by vacating it briefly, see page 88

5.4 Truck brakes in touch mode and does not continue to travel

Possible cause	Action
The pre-set maximum travel route for uninterrupted pedestrian mode has been reached (E1755)	Release the travel switch or "pedestrian mode" button briefly and press again if necessary, see page 90

5.5 Lithium-ion battery fault

If any faults are found in the battery or the Jungheinrich charger, contact the manufacturer's customer service department immediately.
The operating company must not carry out any remedial work on its own.
Independent attempts to tamper with or repair the battery may invalidate the warranty. A service agreement with Jungheinrich will
help identify faults.

⚠ WARNING!

Do not open the battery.

5.5.1 Restricted use (slow travel, lift cut-off, no travel) of the truck

Possible cause	Actions
– Error in a strand (event message 5195.x) The lithium-ion battery can still be used, but with reduced capacity.	– Connect the lithium-ion battery to the battery charger. – If the malfunction persists, contact the manufacturer's customer service department.

➔ For other malfunctions, see the truck operating instructions.

5.5.2 Truck can no longer be switched on

Possible cause	Action
– The lithium-ion battery has switched to energy-saving mode to protect against deep discharge.	– Switch the lithium-ion battery from energy-saving mode to normal operation, see page 51. – Connect the battery to the battery charger. – If the malfunction persists, contact the manufacturer's customer service department.
– The lithium-ion battery was operated outside of the application range or has a fault. The following error messages indicate that the lithium-ion battery is being operated outside of the application range and will lead to the battery shutting down: – High temperature: E5409.1 – Low temperature: E5413.2 – Low voltage: E5344.1 / E5342.1 Before the lithium-ion battery is shut down, corresponding warnings appear on the truck.	– Adjust the lithium-ion battery to the permissible application range, see page 48. – Connect the battery to the battery charger. – If the malfunction persists, contact the manufacturer's customer service department.

6 Moving a truck without its own drive system

⚠ WARNING!

Accidental truck movement

When the brakes are de-activated the truck must be parked on a level surface, since the brakes are no longer effective.

▶Do not release the brake on slopes or inclines.

▶Do not park the truck with the brake released.

▶Apply the brake again when you reach your destination.

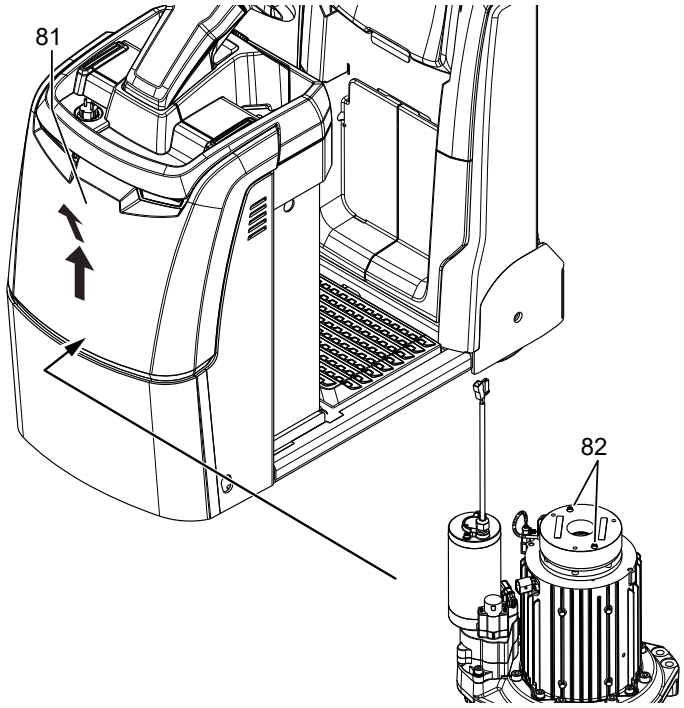

Release the brake

Tools and Material Required

– Two M5x45 screws
– Spanner

Procedure

- Switch off the truck; to do this:
  - Turn the key in the key switch (77) anti-clockwise as far as it will go. Remove the key from the key switch (77).
  - Press the red button on the ISM access module (○).
- Press the emergency disconnect switch (15).
- Prevent the truck from rolling away.
- Disconnect the battery connector (64).
- Lift up the front cover (81) and put it to one side – see page 159.
- Screw in two M5x45 screws (82) fully and lift up the anchor plate.
- To change the travel direction, raise and jack up the truck as required. Turn the drive wheel manually left or right and lower the truck again.

The brake is now released. The truck can be moved.

Applying the brake

Procedure

- Prevent the truck from rolling away.
- Unscrew the two M5x45 screws again.

⚠ CAUTION!

Open covers can cause injury and accidents

▶The covers (battery cover, side panels, drive compartment cover etc.) must be closed during operation.

Attach the front cover (81).

The brakes are now applied again.

⚠ WARNING!

Only return the truck to service when you have identified and rectified the fault.

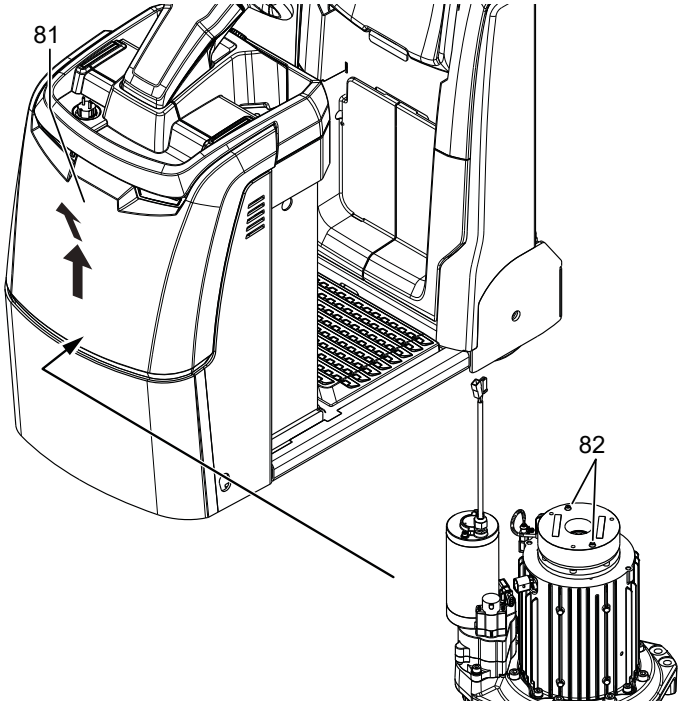

7 Optional Equipment

7.1 Display unit (2 inch display)

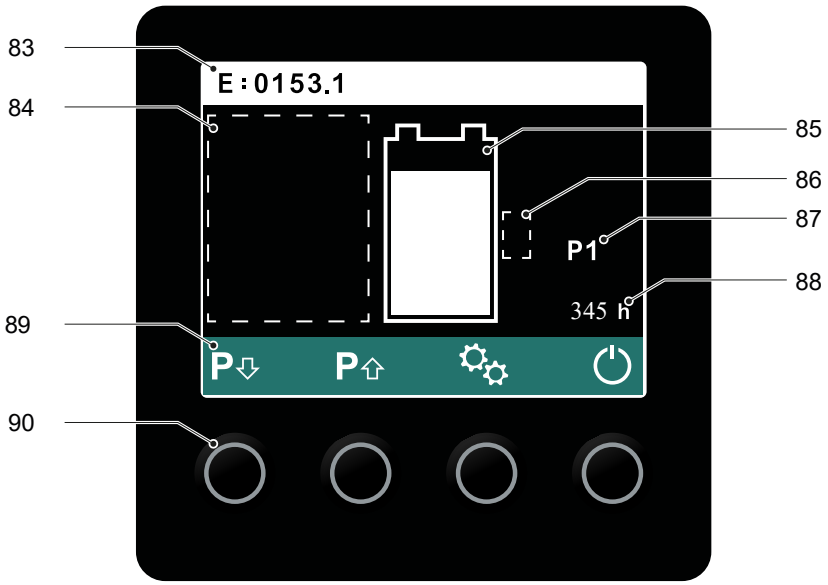

Item	Display or control element	Function
83	Information field	Displays event messages and optional information such as speed – see page 102.
84	Area for display symbols	Area for information concerning operation of the truck. The symbols shown depend on the operating situation and the truck status – see page 106.
85	Battery charge status	The higher the fill level on the charge status indicator, the higher the residual capacity of the battery.
86	Battery type (characteristics)	Shows the set battery type or characteristics[1] 1 = Maintenance-free gel/dry-cell battery 2 = Special battery, for example XFC
87	Travel-program display	Displays the current travel program. The selected travel program is also shown in text form (P1, P2, P3) under the bar display.
88	Service-hours display	Displays the current number of service hours.
89	Function symbols	The functions shown as function symbols are operated using the function key located underneath, see page 106.
90	Function keys	Selection buttons for the corresponding functions.

1) If the setting is for normal or high-performance wet batteries or batteries for special options, no battery type is shown.

7.1.1 Information field

Any event messages are shown in the left section of the information line (83).

The right section of the information line shows the truck speed in km/h or mph.

7.1.2 Button allocation of the display

Functions and operator menus that can be operated via the icons and keys of the display unit depend on the operating situation as well as the scope and settings of the truck.

Key allocation in main menu

Symbol	Meaning
	Menu change: Changes to the next operator menu
	Travel program up (●): Changes the travel program in rider mode
	(No symbol) (○): Uses the pre-set travel program in rider mode The default setting can be changed by the manufacturer's customer service department.
	Shut-down (○): Allows the truck to be switched off Switch off is only available on the display if the truck is switched on with an access code.

Button allocation in options menu (○)

Symbol	Meaning
	Menu change: Changes to the next operator menu
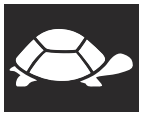	Slow travel: Switches slow travel on and off.
	Daytime travel light (○): Switches the daytime travel light on/off (front lights)
	Floor spot (○): Switches the floor spot warning device on/off The floor spot projects a coloured dot onto the ground 3 m in front of the truck when travelling forwards. The floor spot is intended to make people aware of the travel path being taken by the truck.
	Settings (○): To change to the menu to administer the codes or transponders

Depending on the number of options that can be activated an additional operator menu may appears.

Button allocation in menu for managing codes or transponders (○)

Symbol	Meaning
	Back: Cancels the current procedure and returns to the previous menu.
	Log-in history: Displays the chronological log-in history
	Change set-up code: To change the set-up code and to activate the keypad or the transponder reader.
	Edit access code / transponder: To add or delete access codes or transponders

Button allocation in the submenus

Symbol	Meaning
	Selection up: To select access codes or transponders, to scroll back during the log-in process
	Selection down: To select access codes or transponders, to scroll forward during the log-in process
	Delete: To delete access codes selected
	Add: To add a new access code
	Confirm: To confirm an entry or a transponder code

7.1.3 Symbols in the display

Any number of pictograms can be displayed in the pictogram field (84). The pictograms shown in the pictogram field during operation depend on the operating situation and truck situation.

Symbol	Meaning	Colour	Function
	Pedestrian mode (○)	Yellow	Steer angle in pedestrian mode too large
	Operator platform Presence switch	Yellow	Operator platform not occupied when travel switch actuated (trucks without pedestrian mode optional equipment only)
		Red	Time-out (monitoring function), see page 88
	Stop notice	Red	Truck malfunction detected. – Lifting, lowering and travel functions are deactivated.
	Warning	Yellow	Operating error
		Red	Truck malfunction detected – Lifting, lowering and/or travel functions reduced
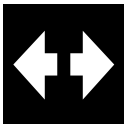	Indicator	Green	Indicator active
	Warning indicator	Red	Warning indicator active
	Parking brake	Red	Parking brake activated
	Battery indicator, low residual capacity	Yellow	Battery capacity ≤ 30% for wet-cell batteries and lithium-ion batteries, battery capacity ≤50% for maintenance-free batteries – Charge the battery soon.
		Red	Battery capacity ≤ 20% for wet-cell batteries and lithium-ion batteries, battery capacity ≤40% for maintenance-free batteries – Charge the battery immediately.

Symbol	Meaning	Colour	Function
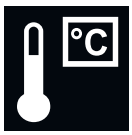	Overtemperature	Yellow	Overtemperature detected – Lifting, lowering and travel functions reduced
		Red	Overtemperature detected – Lifting, lowering and travel functions deactivated
	Lithium-ion battery low temperature (○)	Yellow	Lithium-ion battery low temperature detected – Discharge currents and energy recovery are reduced at low temperatures.
			Lithium-ion battery below permissible temperature range – The truck switches off via the battery contactor. – The display unit switches off.
	Shock display (ISM) (○)	Yellow	Medium-sized shock due to improper driver actions – Slow travel triggered
		Red	Severe shock due to improper driver actions – Lifting, lowering and travel functions are deactivated.
	Trailer travel release (○) (lift status monitoring)	Green	– Load handler is fully lifted. – Travel functions are enabled.
		Yellow	– Load handler is lifted or lowered. – Travel functions are inhibited.
		Yellow (flashing)	Recovery function – Travel in "slow travel" possible. – Trailer lifting and lowering functions deactivated.
		Red	– Load handler is lowered. – Travel functions are inhibited.
	Slow travel	Green	Symbol lights up when "slow travel" button pressed (travel speed reduction).
	Light (○)	Green	At least one light is switched on.

7.2 Keyless Access System

The keyless access systems serve as a replacement for the key switch to release the truck.

The keyless access system allows an individual code to be allocated to each operator or group of operators.



91

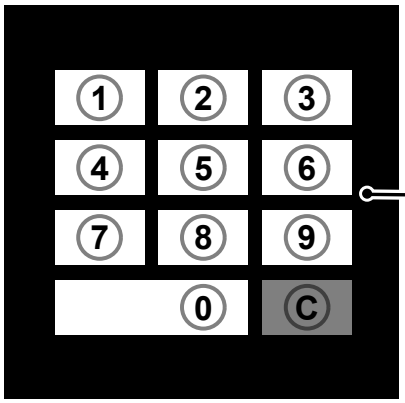

92



93

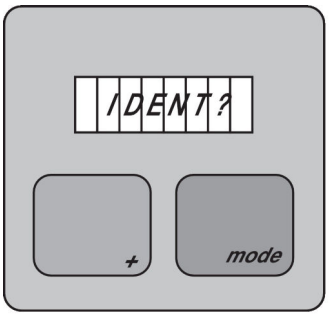

94

Item	Description
91	Display unit (EasyAccess Softkey): – Description see page 101 – Entry of 4-digit set-up and access codes – For set-up and access codes with the numbers 1 to 4 – Up to 10 access codes can be stored
92	Keypad (EasyAccess PINCode): – Only in combination with the display unit (91) – Entry of 4-digit set-up and access codes and C (clear) – For set-up and access codes with the numbers 0 to 9 – Up to 100 access codes can be stored
93	Transponder reader (EasyAccess Transponder): – Only in combination with the display unit (91) – Up to 100 transponders can be stored
94	ISM online access module: – If the truck is equipped with an ISM Online access module, see "ISM Online Access Module" operating instructions.

7.3 General Information about the Use of Keyless Access Systems

The default code is to be found on a sticker. When using for the first time, change the set-up code and remove the sticker!
– Default code: 1-2-3-4
– Factory set-up code: 2-4-1-2

➔ When allocating the codes, ensure the rider trucks are given a different code than pedestrian trucks.

➔ When a valid code is entered or a valid transponder used, a green tick appears in the display unit.
When an invalid code has been entered or a invalid transponder used, a red cross is displayed, and the entry must be repeated.

➔ If the truck is not used for a certain length of time, the display unit switches to standby mode. Pressing any key cancels the standby mode.

The following additional settings can be performed by the manufacturer's customer service department.

7.4 Commissioning the keypad and the transponder reader

If the truck is equipped with a keypad or a transponder reader, it can only be operated using the keys in the display unit. The keypad and the transponder reader have to be activated by the operating company.

7.4.1 Activating the keypad

Procedure

- Release the emergency disconnect switch, see page 80.
- Enter the default code 1-2-3-4 using the keys below the display unit (91).

  The truck is switched on.
- Press the key below the "Settings" symbol (95).
- Press the key below the "Change set-up code" symbol (96).
- Enter the set-up code 2-4-1-2 using the keypad (92).

  The set-up code entered is displayed.

When starting the truck for the first time, change the set-up code. The new set-up code must not be the same as the default set-up code or an access code.

Press the key below the "Delete" symbol (97).

The set-up code is deleted.

- Enter the new set-up code using the keypad (92).
- Press the key below the "Confirm" symbol (99).

  The new set-up code is displayed.

If the new set-up code was entered incorrectly, the procedure can be repeated using the key below the "Delete" symbol (97).

- To return to the main menu, press the key below the "Back" symbol (98).
- Delete the default code, see page 115.
- Create access codes, see page 114.

The keypad is active.

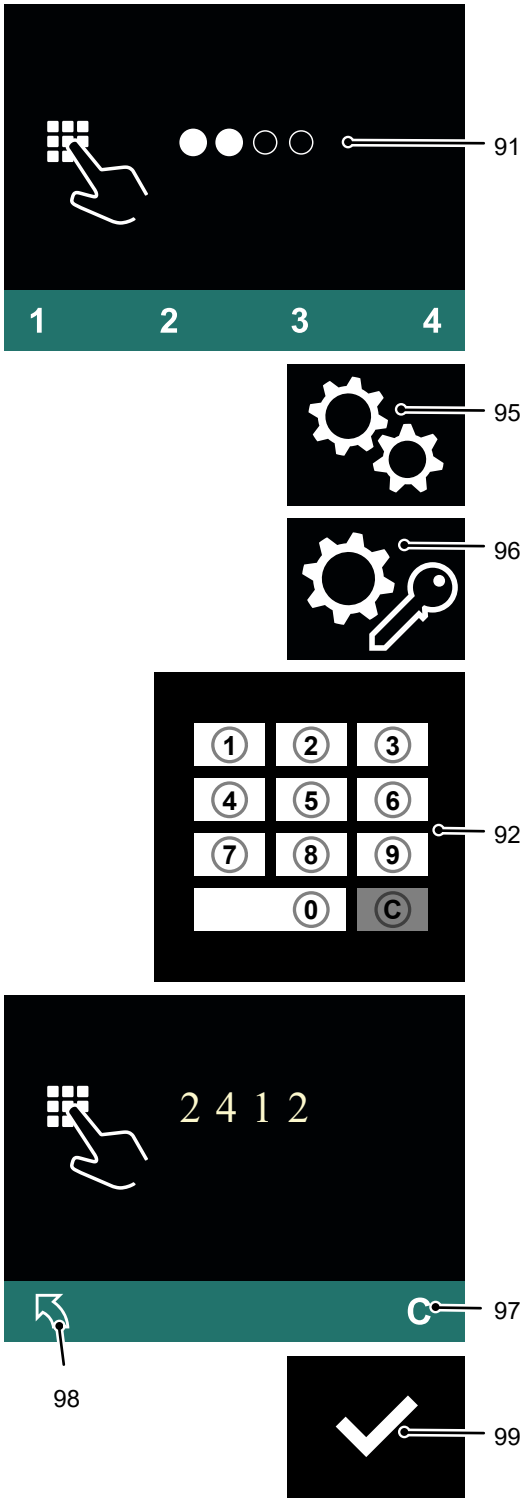

7.4.2 Activating the transponder reader

Procedure

- Release the emergency disconnect switch, see page 80.
- Enter the default code 1-2-3-4 using the keys below the display unit (91).
  The truck is switched on.
- Press the key below the "Settings" symbol (95).
- Press the key below the "Change set-up code" symbol (96).
- Enter the set-up code 2-4-1-2 using the keys below the display unit (91).
  The set-up code entered is displayed.
- Press the key below the "Delete" symbol (97).
  The set-up code is deleted.
- Hold a transponder in front of the transponder reader (93).
  This transponder thus becomes the set-up transponder.
- Press the key below the "Confirm" symbol (99).
  The code for the set-up transponder is displayed.

If the wrong transponder has been used, the procedure can be repeated using the key below the "Delete" symbol (97).

- To return to the main menu, press the key below the "Back" symbol (98).

The default code can no longer be used and must be deleted.

Delete the default code, see page 125.

- Add new transponders, see page 124.

The transponder reader is now active.

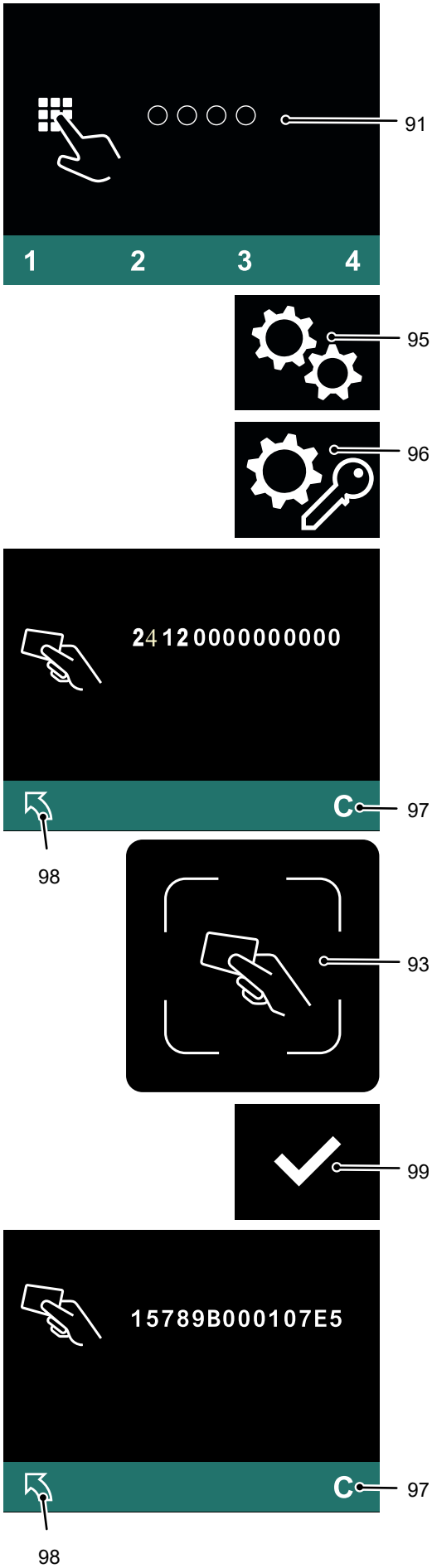

7.5 Using the Display:

7.5.1 Switching on the truck with an access code

Procedure

- Release the emergency disconnect switch, see page 80.
- Enter the access code with the buttons below the display (91).

The truck is switched on.

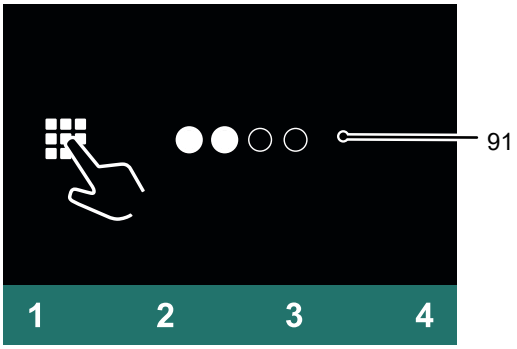

7.5.2 Switching off the truck

Procedure

- Press the key under the "Switch off" symbol (100) in the display unit.
- Press the Emergency Disconnect switch, see page 80.

The truck is switched off.

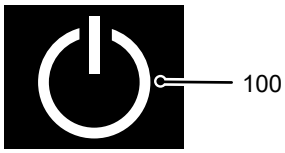

7.5.3 Changing the set-up code

Requirements

– The truck is switched on, see page 112.

Procedure

- Press the key below the "Settings" symbol (95).
- Press the key below the "Change set-up code" symbol (96).
- Enter the set-up code using the keys below the display unit (91).

  The set-up code entered is shown as filled-in circles.
- Press the key below the "Delete" symbol (97).

  The set-up code is deleted.
- Enter the new set-up code using the keys below the display unit (91).

➔ The new set-up code must be different from existing access codes.

- Press the key below the "Confirm" symbol (99).

  The new set-up code is displayed.

➔ If the new set-up code has been entered incorrectly, delete it and add a set-up code again.

To return to the main menu, press the key below the "Back" symbol (98).

The set-up code has been changed.

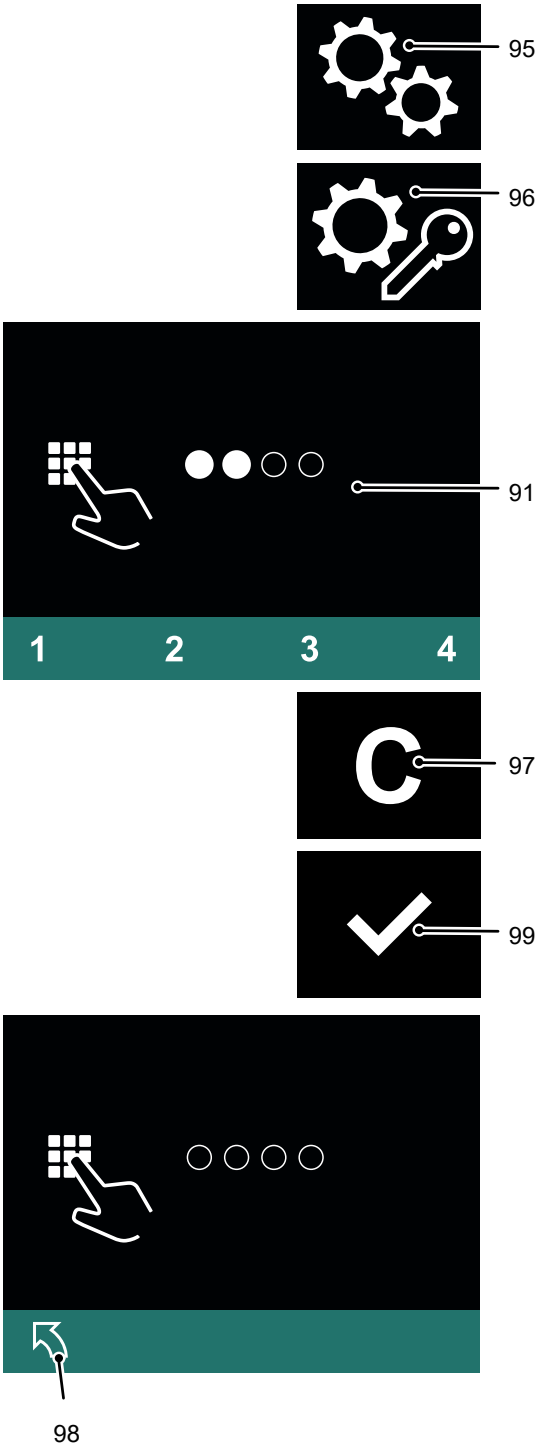

7.5.4 Adding a new access code

Requirements

– The truck is switched on, see page 112.

Procedure

- Press the key below the "Settings" symbol (95).
- Press the key below the "Edit access code" symbol (101).

  The set-up code is requested.
- Enter the set-up code using the keys below the display unit (91).

  All the access codes are displayed.
- Press the key below the "Add" symbol (102).
- Enter the new access code using the keys below the display unit (91).

The new access code must be different from existing access codes.

- Press the key below the "Confirm" symbol (99).

  The new access code is displayed.

If the new access code has been entered incorrectly, delete it, see page 115, and add an access code again.

To return to the main menu, press the key below the "Back" symbol (98).

A new access code has been added.

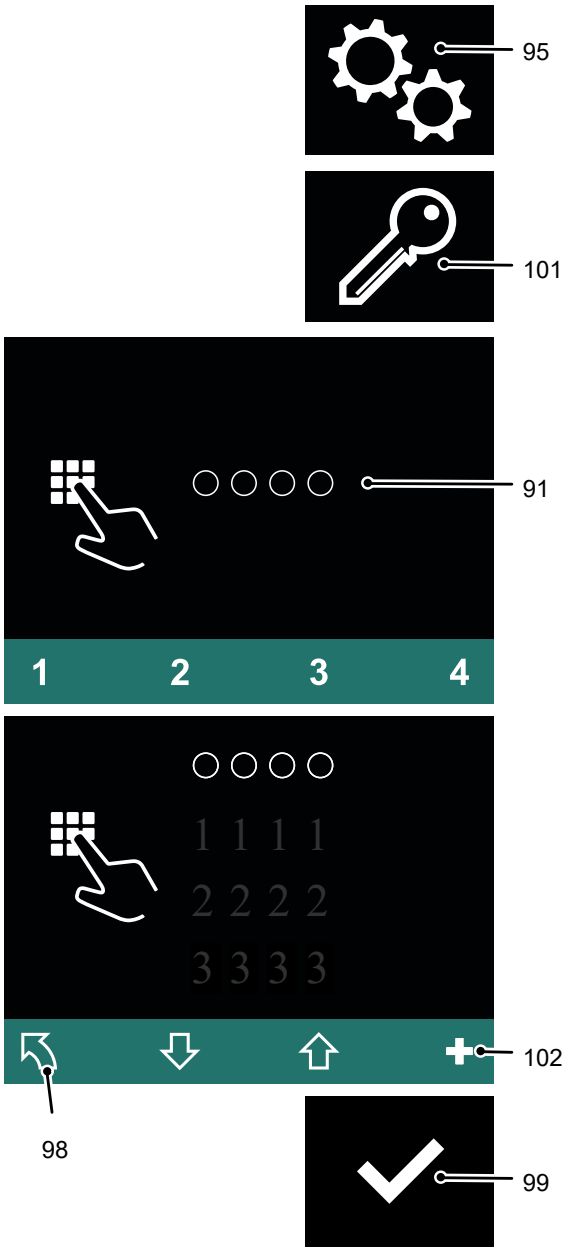

7.5.5 Deleting an access code

Requirements

– The truck is switched on, see page 112.

Procedure

- Press the key below the "Settings" symbol (95).
- Press the key below the "Edit access code" symbol (101).

  The set-up code is requested.
- Enter the set-up code using the keys below the display unit (91).

  All the access codes are displayed.
- Select the access code to be deleted using the key below the "Down selection" symbol (103).
- Press the key below the "Delete" symbol (97).

  The access code has been deleted.
- To return to the main menu, press the key below the "Back" symbol (98).

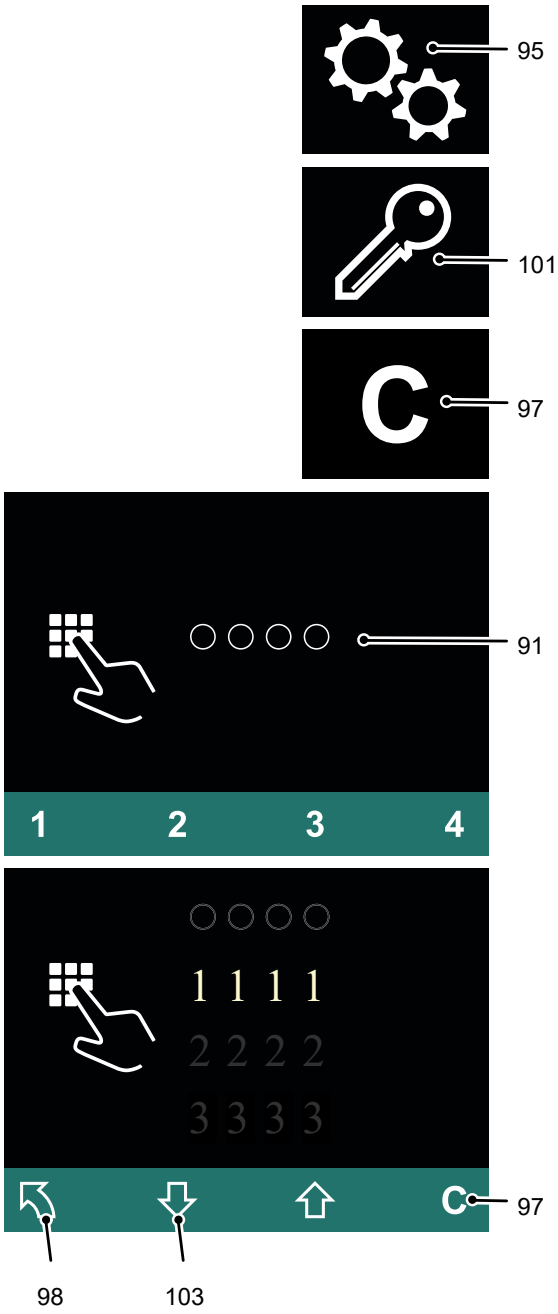

7.5.6 Displaying the log-in history

The use of the last different access codes is displayed during the log-in process. The last log-in is displayed first.

If multiple access codes are logged as being displayable simultaneously, the display area can be moved by scrolling forward or back.

Requirements

– The truck is switched on, see page 112.

Procedure

- Press the key below the "Settings" symbol (95).
- Press the key below the "Log-in process" symbol (104).
- Enter the set-up code using the keys below the display unit (91).

  The set-up code entered is shown as filled-in circles.
- To scroll forward, press the button under the "Down selection" symbol (103) as many times as necessary.

  The display area moves: Additional earlier log-ins are displayed.
- To scroll back, press the button under the "Up selection" symbol (105) as many times as necessary.

  The display area moves: More recent log-ins are displayed.
- To return to the main menu, press the key below the "Back" symbol (98).

The log-in process is displayed.

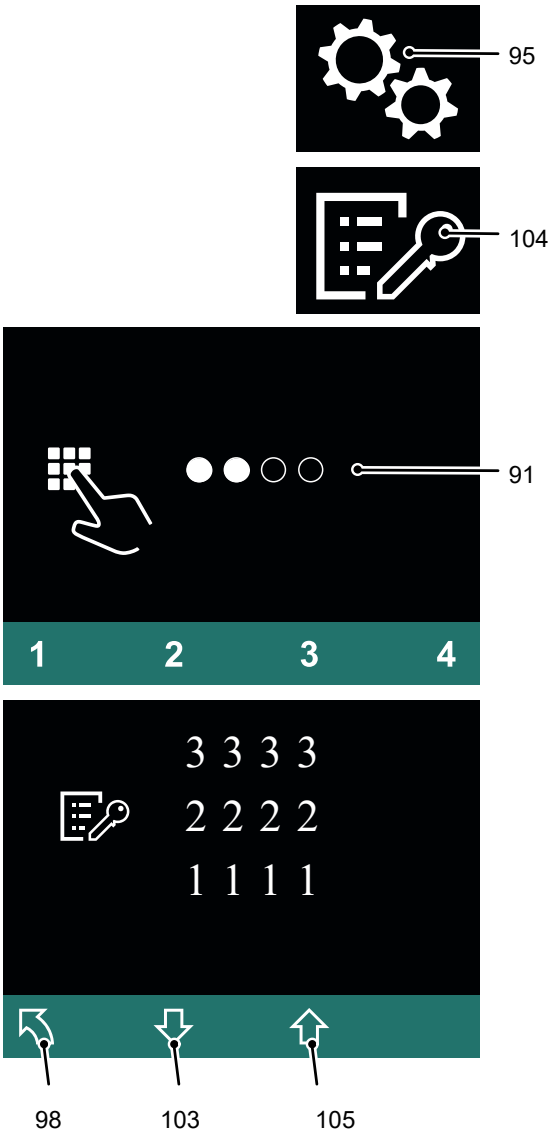

7.6 Using the Keypad

7.6.1 Switching on the truck with an access code

Procedure

- Release the emergency disconnect switch, see page 80.
- Enter the access code with the keypad (92).

The truck is switched on.

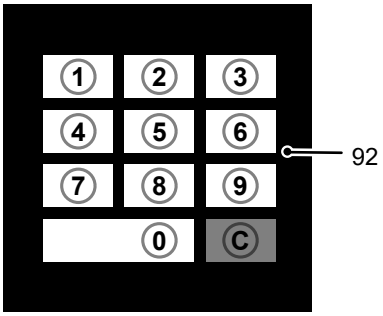

7.6.2 Switching off the truck

Procedure

- Press the key under the "Switch off" symbol (100) in the display unit.
- Press the Emergency Disconnect switch, see page 80.

The truck is switched off.

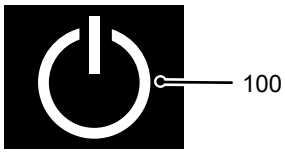

7.6.3 Changing the set-up code

Requirements

– The truck is switched on, see page 117.

Procedure

- Press the key below the "Settings" symbol (95).
- Press the key below the "Change set-up code" symbol (96).
- Enter the set-up code using the keypad (92).

  The set-up code entered is shown in the display unit (91) as filled-in circles.
- Press the key below the "Delete" symbol (97).

  The set-up code is deleted.
- Enter the new set-up code using the keypad (92).

→ The new set-up code must be different from existing access codes.

- Press the key below the "Confirm" symbol (99).

  The new set-up code is displayed.

→ If the new set-up code has been entered incorrectly, delete it and enter the correct set-up code.

To return to the main menu, press the key below the "Back" symbol (98).

The set-up code has been changed.

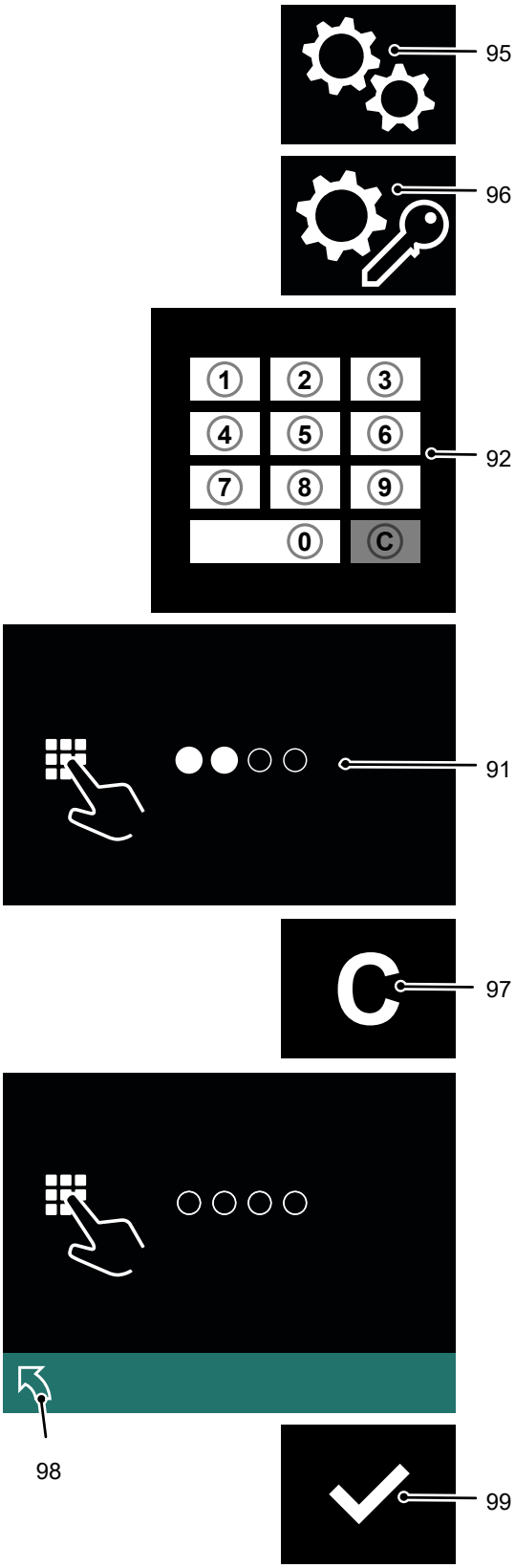

7.6.4 Adding a new access code

Requirements

– The truck is switched on, see page 117.

Procedure

- Press the key below the "Settings" symbol (95).
- Press the key below the "Edit access code" symbol (101).

  The set-up code is requested.
- Enter the set-up code using the keypad (92).

  All access codes are shown on the display unit (91).
- Press the key below the "Add" symbol (102).
- Enter a new access code using the keypad (92).

➔ The new access code must be different from existing access codes.

- Press the key below the "Confirm" symbol (99).

  The new access code is shown on the display unit (91).

➔ If the new access code has been entered incorrectly, delete it, see page 120, and enter the correct access code.

To return to the main menu, press the key below the "Back" symbol (98).

A new access code has been added.

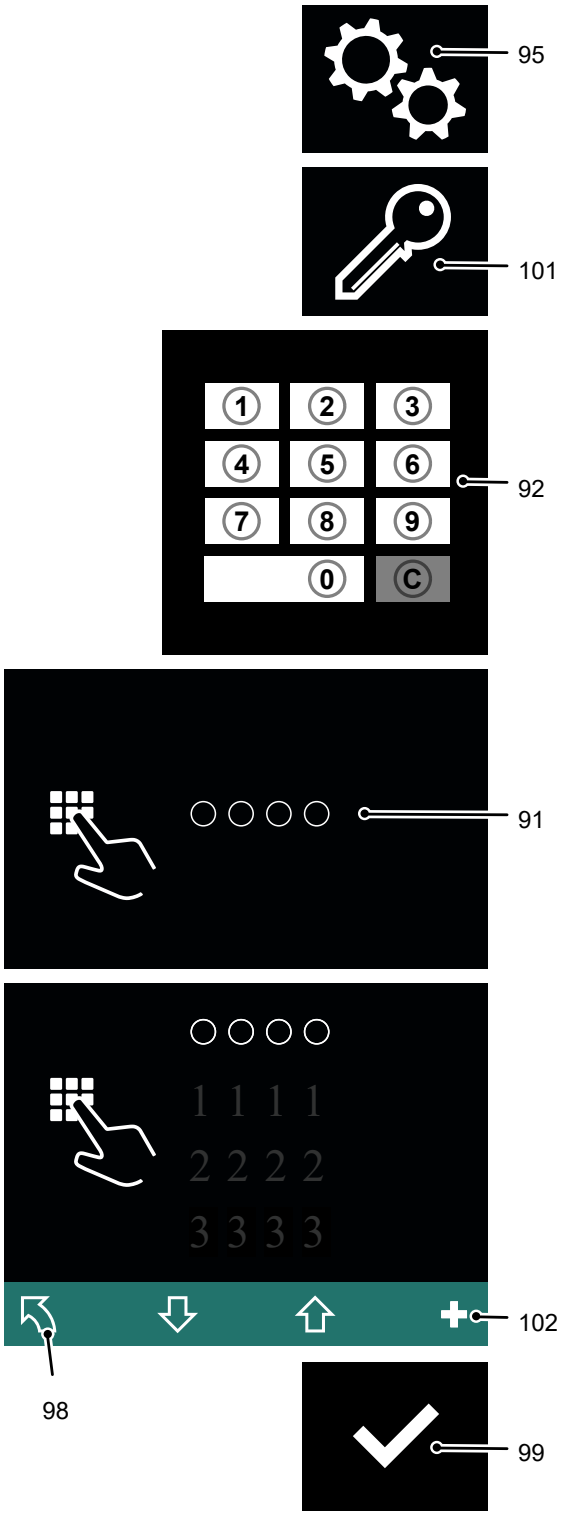

7.6.5 Deleting an access code

Requirements

– The truck is switched on, see page 117.

Procedure

- Press the key below the "Settings" symbol (95).
- Press the key below the "Edit access code" symbol (101).

  The set-up code is requested.
- Enter the set-up code using the keypad (92).

  All access codes are shown on the display unit (91).
- Select the access code to be deleted using the key below the "Down selection" symbol (103).
- Press the key below the "Delete" symbol (97).

  The access code has been deleted.
- To return to the main menu, press the key below the "Back" symbol (98).

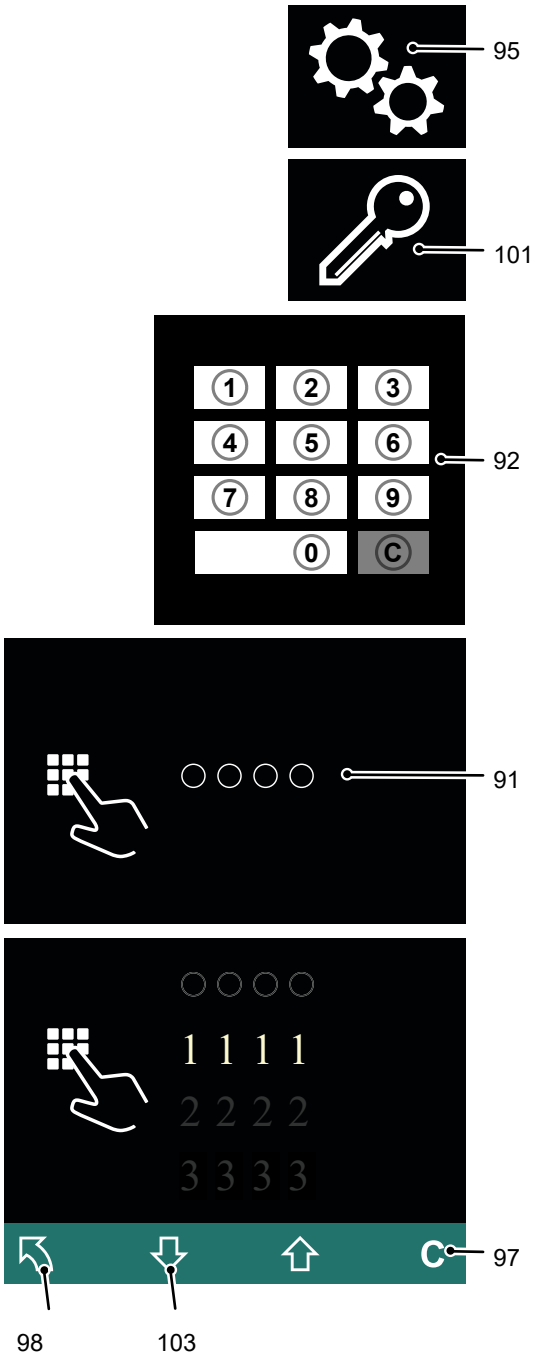

7.6.6 Displaying the log-in history

The use of the last different access codes is displayed during the log-in process. The last log-in is displayed first.

If multiple access codes are logged as being displayable simultaneously, the display area can be moved by scrolling forward or back.

Requirements

– The truck is switched on, see page 117.

Procedure

- Press the key below the "Settings" symbol (95).
- Press the key below the "Log-in process" symbol (104).
- Enter the set-up code using the keypad (92).

  The set-up code entered is shown in the display unit (91) as filled-in circles.
- To scroll forward, press the button under the "Down selection" symbol (103) as many times as necessary.

  The display area moves: Additional earlier log-ins are displayed.
- To scroll back, press the button under the "Up selection" symbol (105) as many times as necessary.

  The display area moves: More recent log-ins are displayed.
- To return to the main menu, press the key below the "Back" symbol (98).

The log-in process is displayed.

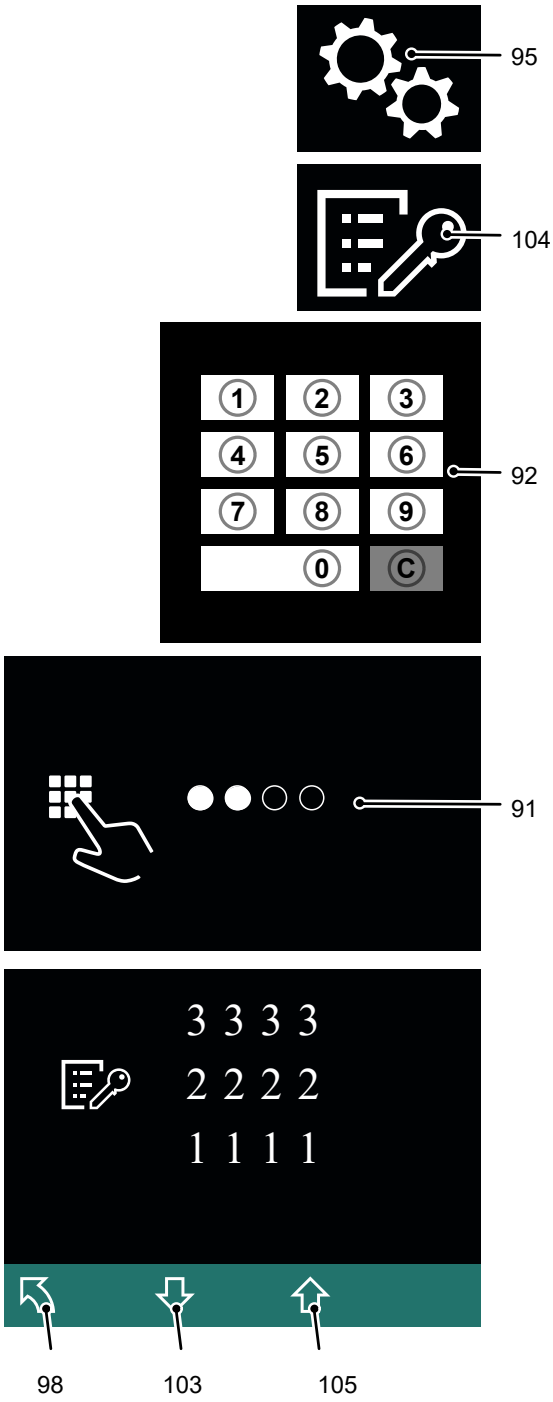

7.7 Operating the transponder reader

NOTICE

Take care not to damage the transponder. If the transponder is damaged, the truck cannot be switched on.

7.7.1 Switching on the truck with a transponder

Procedure

- Release the Emergency Disconnect switch, see page 80.
- Hold the transponder in front of the transponder reader (93).

  A green tick appears and remains until the transponder has been confirmed. If there is no confirmation within 20 seconds the access prompt appears.
- Press the button below the "Confirm" symbol (99).

The truck is switched on.

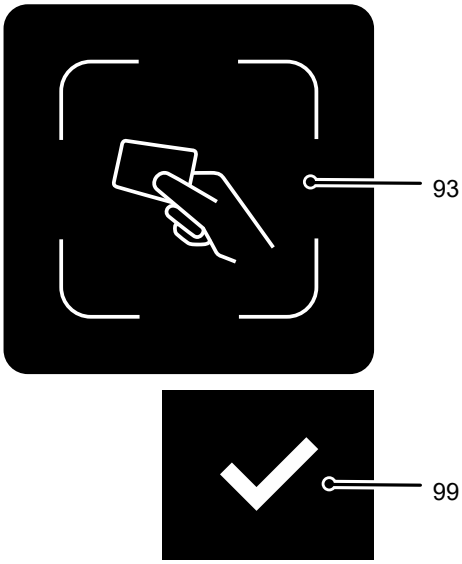

The truck can only be switched on when the display unit (91) is lit. If the display unit is in standby the code or transponder will not be recognised. Pressing any key cancels standby mode.

7.7.2 Switching off the truck

Procedure

- Press the key under the "Switch off" symbol (100) in the display unit.
- Press the Emergency Disconnect switch, see page 80.

The truck is switched off.

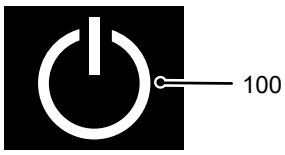

7.7.3 Changing the set-up transponder

Requirements

– The truck is switched on, see page 122.

Procedure

- Press the key below the "Settings" symbol (95).
- Press the key below the "Change set-up code" symbol (96).
- Place the set-up transponder on the transponder reader (93).

  The code of the set-up transponder is shown on the display unit (91).
- Press the key below the "Delete" symbol (97).

  A dashed line is shown.
- Place the new set-up transponder on the transponder reader (93).

➔ The new set-up transponder code must be different from existing transponder codes.

- Press the key below the "Confirm" symbol (99).

  The new code for the set-up transponder is displayed.

➔ If the wrong transponder has been used, the procedure can be repeated using the key below the "Delete" symbol (97).

To return to the main menu, press the key below the "Back" symbol (98).

The set-up transponder has been changed.

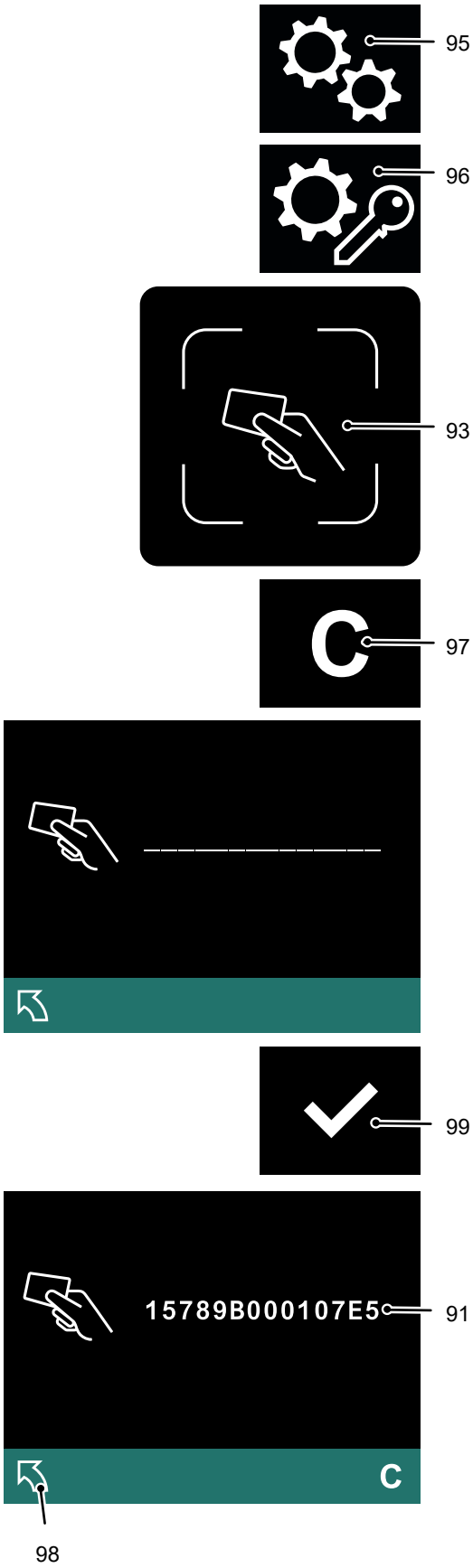

➔ With components software from V1.04 onwards, up to 4 set-up transponders can be used.

7.7.4 Adding a new transponder

Requirements

– The truck is switched on, see page 122.

Procedure

- Press the key below the "Settings" symbol (95).
- Press the key below the "Edit transponder" symbol (101).

  The set-up transponder is requested.
- Place the set-up transponder on the transponder reader (93).

  All transponder codes are shown on the display unit (91).
- Press the key below the "Add" symbol (102).
- Place the new transponder on the transponder reader (93).

➔ The new transponder code must be different from existing transponder codes.

- Press the key below the "Confirm" symbol (99).

  The new transponder code is displayed.

➔ If the wrong transponder has been used, delete it, see page 125, and add a correct transponder.

To return to the main menu, press the key below the "Back" symbol (98).

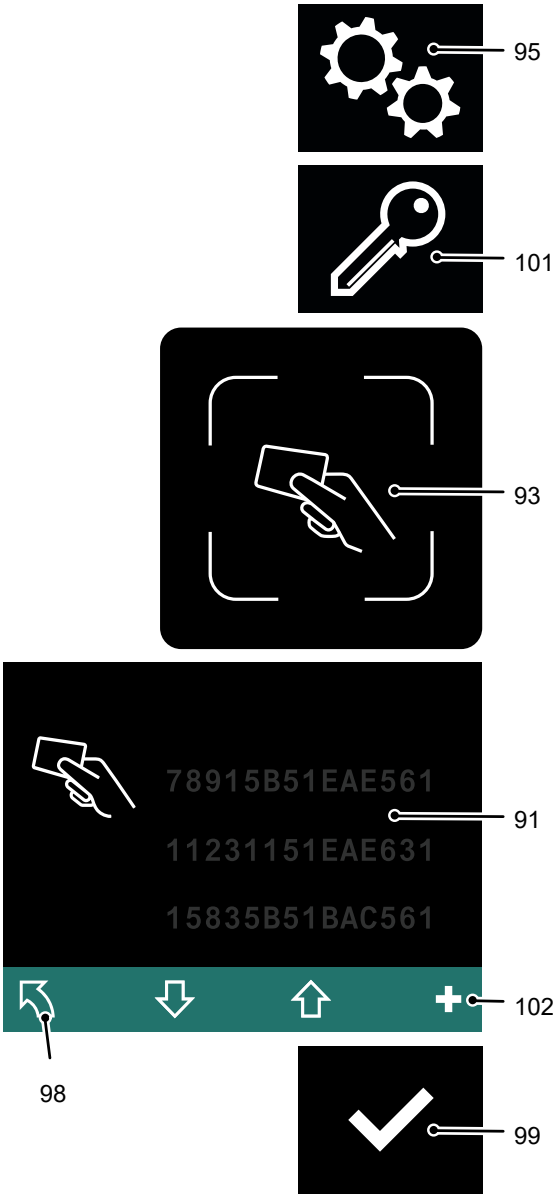

A new transponder has been added.

➔ The transponder codes saved are sorted first of all numerically and then alphabetically.

7.7.5 Deleting a transponder

Requirements

– The truck is switched on, see page 122.

Procedure

- Press the key below the "Settings" symbol (95).
- Press the key below the "Edit transponder" symbol (101).

  The set-up transponder is requested.
- Place the set-up transponder on the transponder reader (93).

  All transponder codes are shown on the display unit (91).
- Select the transponder code to be deleted using the key below the "Down selection" symbol (103).
- Press the key below the "Delete" symbol (97).

  The transponder has been deleted.
- To return to the main menu, press the key below the "Back" symbol (98).

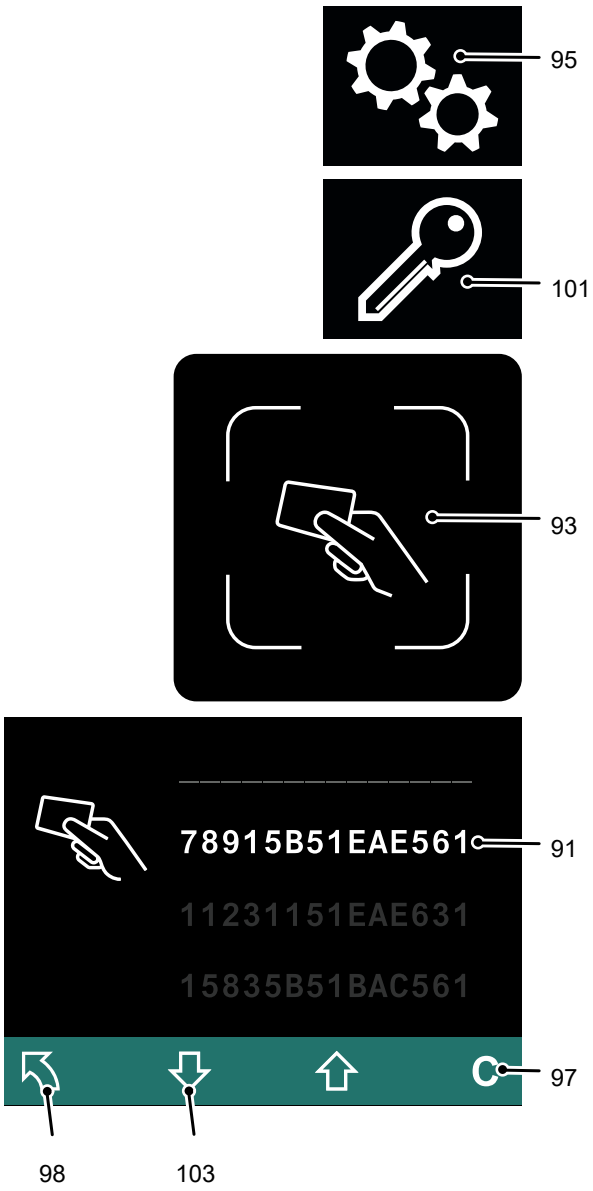

7.7.6 Displaying the log-in history

The use of the last different transponders is displayed during the log-in process. The last log-in is displayed first.

If multiple transponders are logged as being displayable simultaneously, the display area can be moved by scrolling forward or back.

Requirements

– The truck is switched on, see page 117.

Procedure

- Press the key below the "Settings" symbol (95).
- Press the key below the "Log-in process" symbol (104).
- Place the set-up transponder on the transponder reader (93).
- To scroll forward, press the button under the "Down selection" symbol (103) as many times as necessary.
  The display area moves: Additional earlier log-ins are displayed.
- To scroll back, press the button under the "Up selection" symbol (105) as many times as necessary.
  The display area moves: More recent log-ins are displayed.
- To return to the main menu, press the key below the "Back" symbol (98).

The log-in process is displayed.

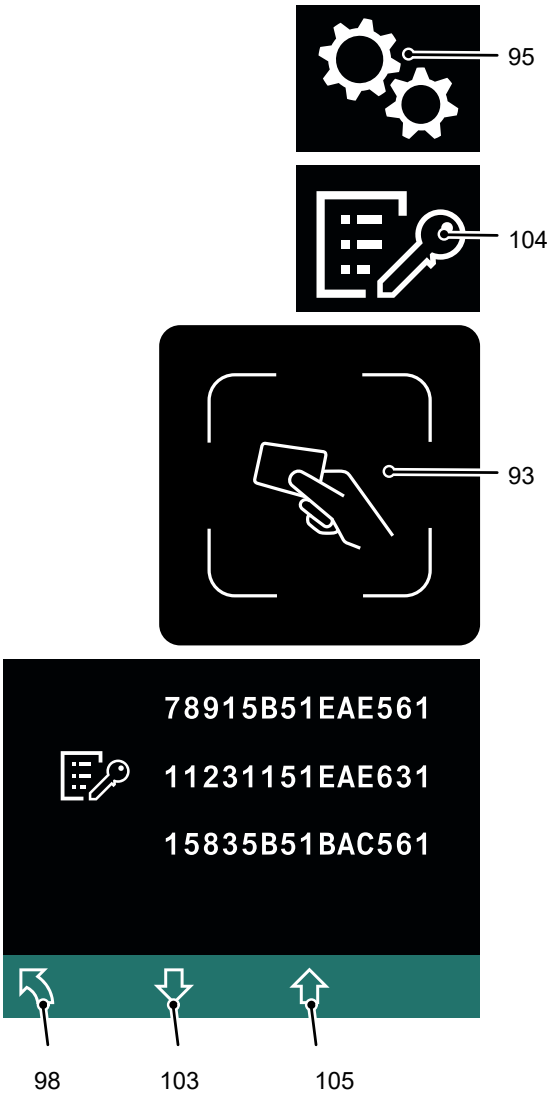

7.8 Coupling Types

⚠ CAUTION!

Trapping hazard

There is a trapping risk when you attach a trailer.

▶ Follow the instructions of the coupling manufacturer if using special trailer couplings.

▶ Secure the trailer to prevent it from rolling away before coupling it.

▶ The towing tractor and trailer must be on level ground when attaching and uncoupling trailers.

▶ Ensure there is nobody between the towing tractor and the trailer.

▶ All controls must be set to neutral.

7.8.1 Single plug-in coupling (○)

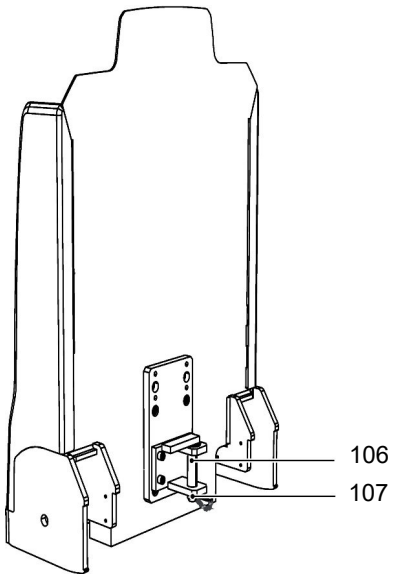

Hitching the trailer

Procedure

- Remove the pin (107).
- Remove the bolt (106) fully from the trailer coupling.
- Move the truck forward until the tow eye of the trailer is inserted into the trailer coupling.
- Push the bolt of the trailer coupling (106) from the top through the holes of the trailer coupling and the tow eye.
- Insert the pin (107) thereby preventing the bolt from coming loose.

The trailer is now coupled.

Uncoupling Trailers

Procedure

- Prevent the trailer from rolling away.
- Remove the pin (107).
- Remove the bolt (106) fully from the trailer coupling.
- Bring the tow eye of the trailer out from the side of the coupling.
- Push the bolt (106) from the top through the holes of the trailer coupling.
- Insert the pin (107) thereby preventing the bolt from coming loose.

The trailer is now de-coupled.

7.8.2 3-position coupling (○)

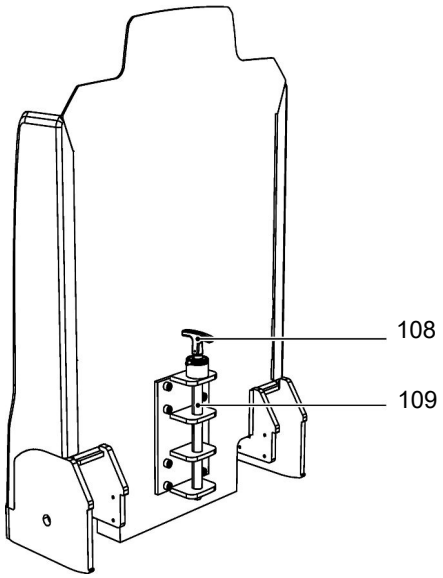

Coupling the trailer

Requirements

– Bolt (109) lifted up fully out of the trailer coupling.

Procedure

- Push the tow eye of the trailer into the trailer coupling.
- Push the bolt of the trailer coupling from the top through the holes of the trailer coupling and the tow eye.
- Turn the handle (108) to lock the coupling.

The trailer is now coupled.

Uncoupling trailers

Procedure

- Prevent the trailer from rolling away.
- Turn the handle (108) until the lock is undone.
- Pull the bolt (109) out of the coupling from the top.
- Bring the tow eye of the trailer out from the side of the coupling.
- Insert the bolt (109) back in the coupling.
- Insert the bolt into the coupling (109) and secure it.

The trailer is now uncoupled.

7.8.3 Coupling with Hand Lever or Remote Unlocking (○)

⚠ WARNING!

An open trailer coupling can result in injuries

The trailer coupling is equipped with a compression spring. The compression spring is activated by the tow eye of the trailer. The trailer coupling closes automatically. Severe hand injuries can occur if you reach into an open trailer coupling.

- ▶ Never reach into an open trailer coupling.
- ▶ Always travel with the trailer coupling closed.
- ▶ Open and close the trailer coupling only immediately before attaching or detaching a trailer.

⚠ CAUTION!

An incorrectly locked trailer coupling can result in accidents.

If the trailer coupling is incorrectly locked, the trailer can come loose during travel.

- ▶ Make sure the trailer coupling is engaged securely before travelling.
- ▶ The control pin must be flush with the control sleeve.

Item	Component
114	Coupling with remote control unlocking (○)
113	Coupling with hand lever

Coupling the trailer

Procedure

- Push the tow eye of the trailer in front of the trailer coupling.
- Check the hitch height.
- Pull the hand lever (116) or remote unlocking (110) fully upwards.

  The bolt of the trailer coupling opens.
- Slowly reverse the truck until the bolt of the coupling engages.
- Check that the control pin (111) is flush with the control sleeve (112).

The trailer coupling is closed and secured. The truck can now pull the trailer.

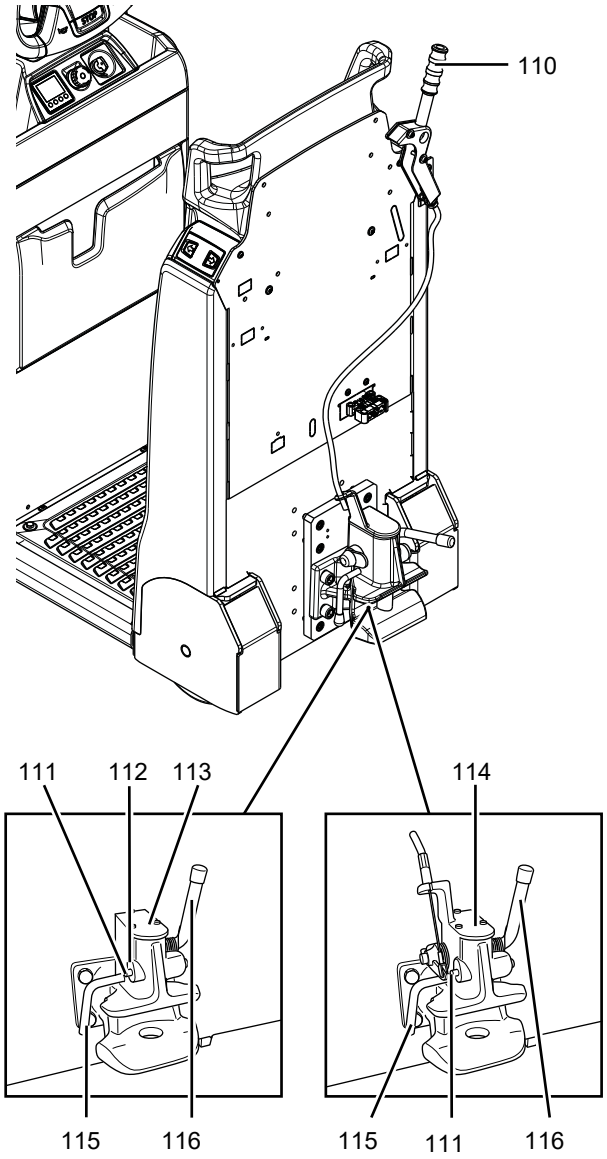

Uncoupling trailers

Procedure

- Prevent the trailer from rolling away.
- Pull the hand lever (116) or remote unlocking (110) fully upwards.
- Drive the truck forward.
- Push the locking hand lever (115) down.
- Check that the control pin (111) is flush with the control sleeve (112).

The trailer coupling is closed and secured. The trailer is unhitched and the truck can continue to travel.

➔ The truck may only continue to travel with the coupling closed.

7.9 Interface between Tow Tractor and Trailer

7.9.1 Electrical interface (○)

The electrical supply of the trailer is established via the plug connection (117). This allows the trailer to be operated as follows:

– Lift/lower with the button on the jetPILOT (●)
– Lift/lower with the platform switch (○)

The following states can be evaluated:

– The "Trailer travel release" symbol (○) on the display unit indicates the lift status of the trailer – see page 106.
– Feedback when all trailers are lifted.

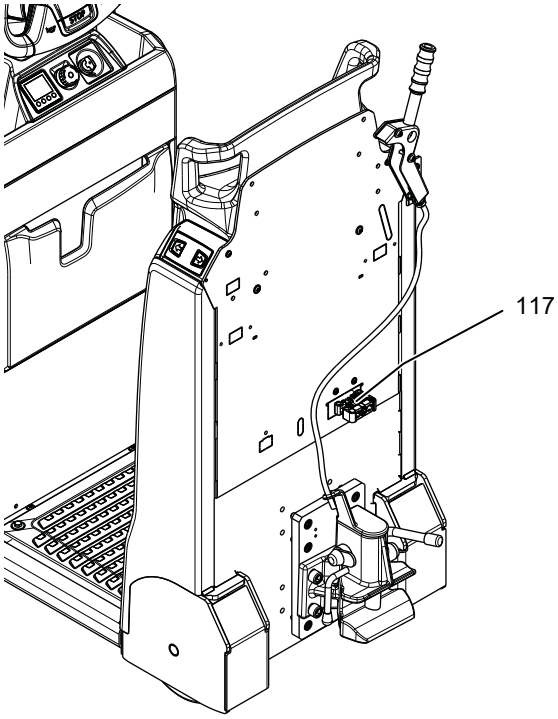

7.9.2 Operating the trailer from the tow tractor

Lifting and lowering with switch on jetPILOT (●)

The buttons on the jetPILOT have the following functions:
– Lifting the trailer loads
– Lowering the trailer loads

Requirements
– Compatible trailers

If the "Lift" (73) button on the jetPILOT is pressed, the trailers lift their load up to the lift limit.

If the "Lower" (74) button on the jetPILOT is pressed, the trailers lower their load fully.

Lifting the trailer load

Requirements
– Tugger train correctly set up, see page 139.
– Truck prepared for operation, see page 73.
– Loads do not exceed the rated capacities of the trailers.
– Loads do not exceed the drawbar pull of the tow tractor.
– Truck stationary.

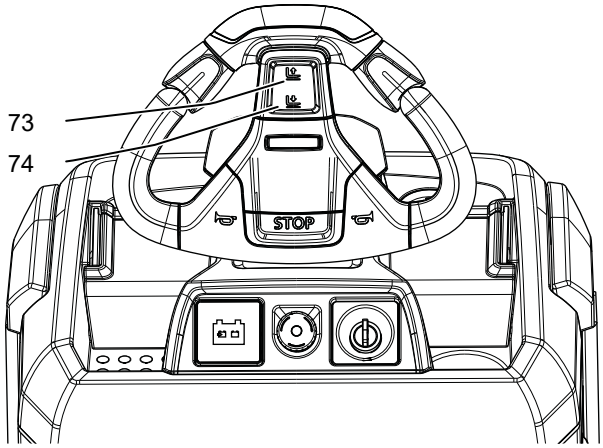

Procedure
- Press the "Lift" (73) button.
- Check if the trailers have lifted all loads.
- Wait for travel release (○) if necessary.

➔ The "Trailer travel release" (○) symbol on the display unit indicates the lift status of the trailer, see page 106.

The trailer load is lifted. Travel release is issued.

➔ On trucks with electrical trailer interface (○), an electrical lift signal is sent to the trailer via the interface on lifting. This signal is sent only when the operator is in the operator position.

Lowering the trailer load

Requirements

– Truck parked on a level surface.
– Truck stationary.

Procedure

• Press the "Lower" (74) button.

The trailer load is lowered.

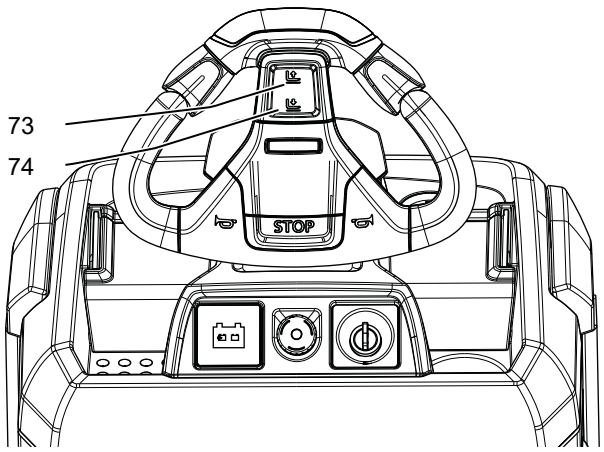

➔ On trucks with electrical interface (○), a signal is sent to the trailer via the interface in lowering mode. This signal is sent only when the operator is in the operator position and continues for a further 15 seconds after leaving the operator position.

Lifting/lowering via operator platform (○)

Optional equipment may be installed in tow tractors to allow lifting and lowering of trailers by occupying and relieving the operator platform (79). The operator occupies the operator platform and the trailer load is lifted If the operator leaves the operator platform, the trailer load is lowered.

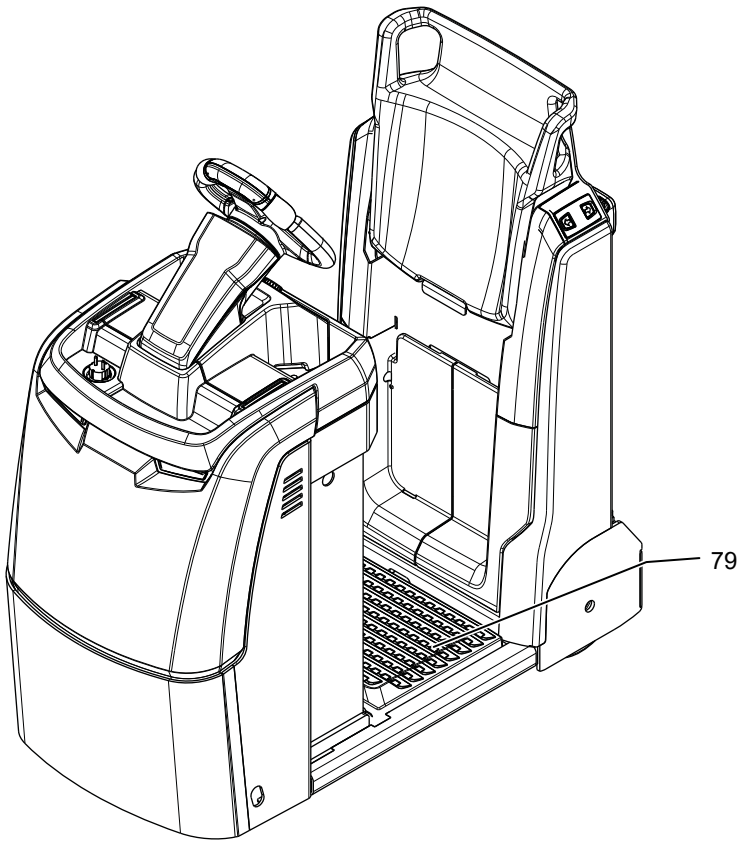

Lifting the trailer load via platform switch

Requirements

– The "Lifting and lowering via operator platform" optional equipment is available.
– Tugger train correctly set up, see page 139.
– Truck prepared for operation, see page 73.
– Loads do not exceed the rated capacities of the trailers.
– Loads do not exceed the drawbar pull of the tow tractor.

Procedure

• Step onto the operator platform (79).
  The load is lifted.
• Check if the trailers have lifted all loads.
• If necessary, wait for travel release (○).

➔ The "Trailer travel release" (○) symbol on the display unit indicates the lift status of the trailer, see page 106.

The trailer load is lifted. Travel release is issued.

➔ On trucks with electrical trailer interface (○), an electrical lift signal is sent to the trailer via the interface on lifting. This signal is sent only when the operator is in the operator position.

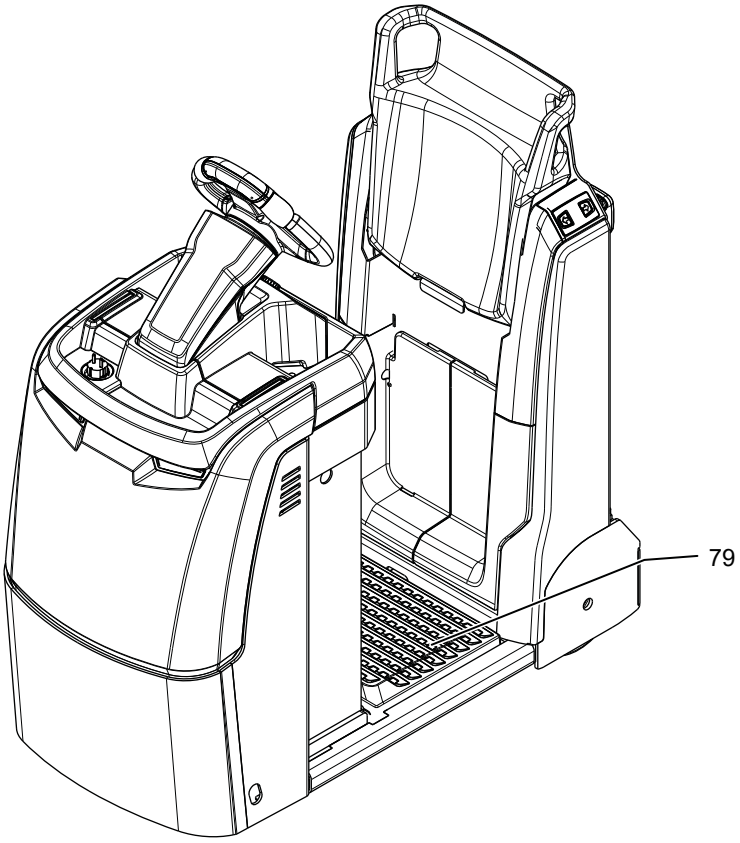

Lowering the trailer load via platform switch

Requirements

– Truck parked on a level surface.
– The "Lifting and lowering via operator platform" optional equipment is available.

Procedure

• Leave the operator platform (79).

The trailer load is lowered.

➔ On trucks with electrical interface (○), a signal is sent to the trailer via the interface in lowering mode. This signal is sent only when the operator is in the operator position and continues for a further 15 seconds after leaving the operator position.

7.10 Tugger Train

7.10.1 Safety regulations for travel mode

⚠ WARNING!

Removing or disabling safety devices can cause accidents

Removing or disabling safety devices such as the emergency disconnect switch, panels etc. can result in accidents and injury.

- ▶ Report any defects immediately to your supervisor.
- ▶ Defective tugger trains or trailers must be taken out of service and labelled accordingly.
- ▶ Do not return the tugger train to service until you have identified and rectified the fault.

⚠ WARNING!

Trapping hazard

High risk of injury between the trailers

- ▶ The operator bears the responsibility for ensuring that no one comes between the trailers during travel.
- ▶ It is permitted to stand between the trailers only during coupling and uncoupling operations, which must be performed by the operator personally.

⚠ WARNING!

Towed load

In difficult application conditions (inclines, smooth or slippery travel routes) the tow load must have to be reduced to ensure braking without risk of accidents. The maximum load specified applies only for towing on level, non-slip ground with sufficient capacity.

The use of braked trailers is recommended on rising / falling gradients greater than 4%%.

⚠ WARNING!

Trailer load under difficult operating conditions

The maximum load specified applies only for the tow tractor on level, non-slip ground with sufficient capacity. Under difficult operating conditions (downhill slopes, smooth or slippery travel lanes) the following must be observed:

- ▶ Reduce the trailer load so that it is possible to brake safely.
- ▶ Drive carefully, as the risk when operating the tugger train increases with increasing load.

⚠ CAUTION!

Risk of injury due to out-of-control trailers

Failure to pay attention to the tugger train can result in it getting out of control and causing injuries as well as material damage.

- ▶ Before setting off, the operator must make sure that the trailer coupling is secure.

⚠ CAUTION!

- ▶ Always pull, never push trailers.
- ▶ Familiarise yourself with the travel behaviour of the tugger train when you start to travel.

7.10.2 Setting up the tugger train

⚠ CAUTION!

Risk of injury due to electrical interface

If the tugger train is put together starting at the tow tractor, there is a risk of electric shock in the event of physical contact with the cable connection.

▶ Set up the tugger train starting at the rear.

▶ Plug the final connector into the last trailer.

▶ The electrical connection between the first trailer and the tow tractor should be made last of all. Connect the cable connection to the trailer first and then to the tow tractor.

⚠ CAUTION!

The total load of the tugger train must not exceed the maximum trailer load of the tow tractor.

Setting up a tugger train with an electrical interface

➔ GTP 110/210/216

➔ GTE 312

Requirements

– Tow tractor with a suitable coupling at the same height as the towing mechanism.
– Tow tractor with a sufficient rated drawbar pull.

Procedure

- Mechanically connect all trailers in series.
- Connect the power connections.

➔ Always start from the end of the tugger train!

  - Plug the final connector in the truck socket of the last trailer.
  - Establish the connection between the last trailer and the penultimate trailer.
  - Establish any further connections.
- Establish the connection between the first trailer and the tow tractor.
  - Plug the connector into the truck socket of the trailer.
  - Plug the connector into the truck socket of the tow tractor.

The tugger train has been set up.

7.10.3 Travelling in a tugger train

⚠ CAUTION!

Risk of accident

- ▶ The tugger train is to be used only in warehouse zones that are closed off to other personnel.
- ▶ All persons working in the warehouse must be instructed in the properties of the tugger train and be aware of its special features.
- ▶ The tugger train operator must ensure that other persons keep a safe distance to the tugger train.
- ▶ It is not permitted to be between the trailers.
- ▶ It is not permitted to carry passengers.
- ▶ It is not permitted to reverse with the tugger train.

NOTICE

Instability of the tugger train

Toppling of the tugger train

- ▶ The operator must ensure that the trolleys are evenly loaded.
- ▶ To increase the stability of the tugger train, the operator must ensure that heavy loads are loaded as far to the front and light loads as far to the rear of the tugger train as possible.
- ▶ The operator must also ensure that the trailers are always loaded from front to back.

7.10.4 Separating the tugger train

Separating a tugger train with an electrical interface

➔ GTP 110/210/216

➔ GTE 312

Requirements

– Tow tractor parked securely.
– Trailers parked securely.
– Tugger train is on level ground and not on any inclines.

Procedure

- Disconnect the connection between the tow tractor and the first trailer.
  - Disconnect the connector from the truck socket of the tow tractor.
  - Disconnect the connector from the truck socket of the trailer.
- Disconnect the power connections.

➔ Always start from the start of the tugger train!

  - Disconnect the connection between the trailers.
  - Disconnect the connection between the penultimate trailer and the last trailer.
- Mechanically separate all trailers.

The tugger train has been separated.

➔ For travel without trailer, the "Lift" button must first be pressed and the final connector must be inserted into the truck socket on the tow tractor. The "Trailer travel release" symbol switches to green, see page 95.

7.11 Recovery function with electrical interface

⚠ CAUTION!

Danger from inadequately secured load

The truck can also be moved in pedestrian mode with the trailer lowered. In this case, an adequately secured load cannot be guaranteed.

▶Travel with caution.

▶Secure the load adequately.

Activating the recovery function

Procedure

- Press the "Lift" (73) button four times within 2 seconds.

The recovery function is activated. The "Trailer travel release" symbol flashes yellow, see page 106.

All trailer functions (lifting, lowering and travel release only when trailer lifted) are deactivated.

Deactivating the recovery function

Procedure

- Switch off the truck. To do this:
  - Turn the key in the key switch (77) anti-clockwise as far as it will go. Remove the key from the key switch (77).
  - Press the red button on the ISM access module(○).
- Press the emergency disconnect switch (15).

The truck is switched off. The recovery function is deactivated after restarting.

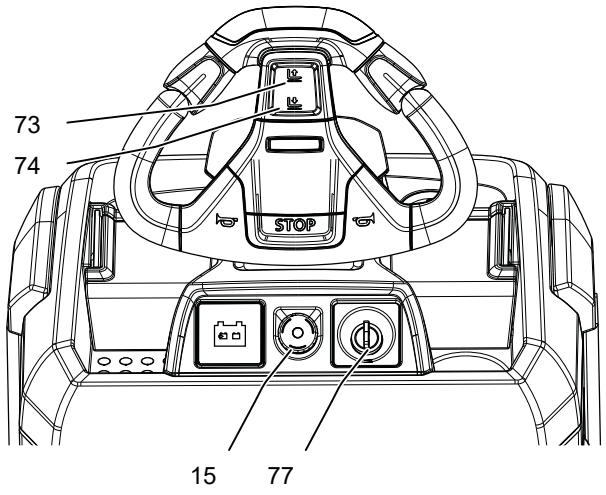

7.12 ISM access module (○)

If the truck is equipped with an ISM access module or Can Code refer to the “ISM Access Module” operator manual.

7.13 Floor-Spot (○)

The Floor-Spot serves as an auxiliary device and projects a coloured dot onto the ground.

⚠ CAUTION!

Risk of accident due to restricted view

Looking directly at the LED light can dazzle and temporarily impair eyesight.

▶ Do not look directly at the LED light.

▶ Practise travelling and working with the floor spot carefully.

▶ Do not change the factory setting.

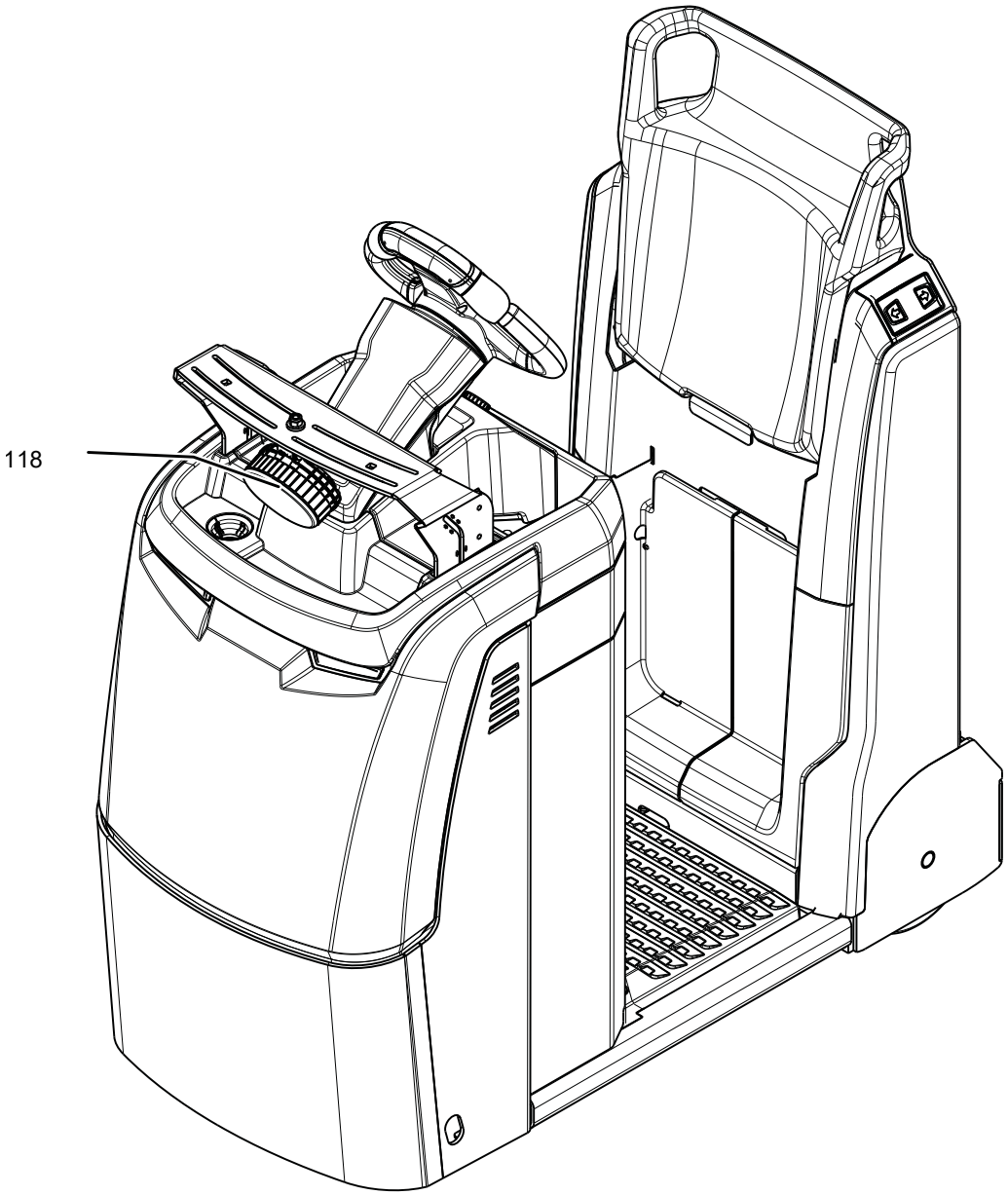

Item	Description
118	Floor-Spot

7.13.1 Additional information on Floor-Spot blue

⚠ CAUTION!

Risk of retinal damage due to blue light

The Floor-Spot on the truck is classified in risk group 2 according to the standard IEC 62471: medium risk. In the range of 400 nm to 780 nm, blue light can potentially damage the retina of the human eye.

- ▶ Check that the warning notice: "Caution! Potentially dangerous optical radiation" is present and legible, and replace if necessary.
- ▶ Do not look directly into the light beam of the Floor-Spot.
- ▶ When performing maintenance and repairs, take the Floor-Spot out of service, e.g. by disconnecting the battery, and secure it against unintentional recommissioning.

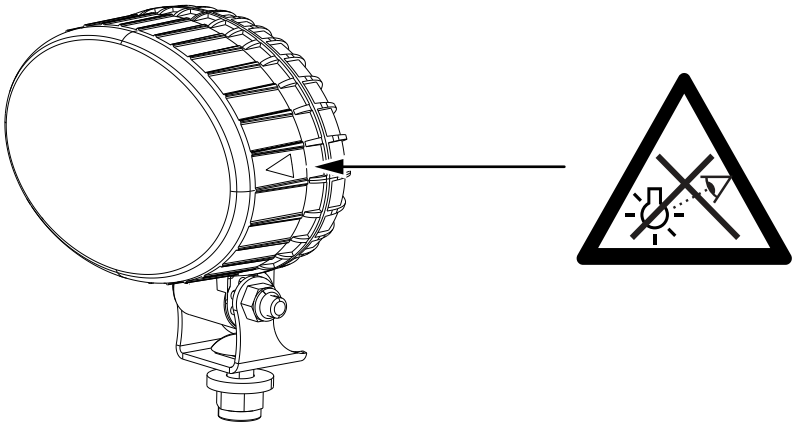

F Truck maintenance

1 Spare Parts

To ensure safe and reliable operation, use only the manufacturer's original spare parts.

The manufacturer’s original spare parts are consistent with the manufacturer’s specifications and guarantee the highest possible quality of safety, size accuracy and material.

The installation or use of non-original spare parts can negatively affect the specified properties of the product and impair safety. The manufacturer cannot be held liable for damage caused by the use of non-original spare parts.

The product-related electronic spare parts catalogue can be found at (www.jungheinrich.de/spare-parts-search) by entering the serial number.

The serial number can be found on the data plate, see page 27.

2 Operational Safety and Environmental Protection

The inspections and maintenance tasks listed in chapter "Maintenance, Inspection and Changing of Maintenance Parts Requiring Replacement" must be performed according to the defined service intervals – see page 167.

The manufacturer recommends the replacement of the maintenance parts also listed in chapter "Maintenance, Inspection and Changing of Maintenance Parts Requiring Replacement" according to the specified replacement intervals – see page 167.

⚠ WARNING!

Risk of accidents and component damage

Any modification to the truck, in particular the safety mechanisms, is prohibited.

Exception: Operating companies should only make changes or have changes made to powered industrial trucks if the truck manufacturer is no longer operating in the field and there is no successor to the business; operating companies must however:

– Ensure that the changes to be made are planned, tested and performed by a specialist engineer in industrial trucks taking safety into account.
– Keep permanent records of the construction, tests and completion of changes
– Carry out and have authorised the respective changes to the capacity data plates, decals and stickers as well as the operating instructions and workshop manuals
– Attach a permanent and clearly visible marking to the truck indicating the types of changes made, the date of the changes and the name and address of the organisation responsible for the work.

NOTICE

Only original spare parts are subject to the manufacturer's quality control. To ensure safe and reliable operation, use only the manufacturer's spare parts.

➔ On completion of inspection and service work, carry out the operations listed in the “Recommissioning the truck after cleaning or maintenance work section, see page 161.

3 Maintenance Safety Regulations

Maintenance and repair personnel

➔ The manufacturer has a customer service department specially trained for these tasks. A maintenance contract with the manufacturer will support trouble-free operation.

Truck maintenance, repair work and changing of parts requiring replacement must only be carried out by specialist personnel. The activities to be carried out are divided into the following target groups.

Customer Services

Customer Services are specially trained in the use of the truck and are able to carry out maintenance and repairs independently. Customer Services are aware of the relevant standards, guidelines and safety regulations as well as potential risks.

Operating company

The maintenance personal of the operating company has the technical expertise and experience to perform the activities in the maintenance check list for the operating company. The maintenance and repair work to be performed by the operating company are also written down, see page 153.

3.1 Working on the electrical system

⚠ WARNING!

Risk of accidents due to electrical current

Make sure the electrical system is voltage-free before starting work on it. The capacitors in the control unit must be completely discharged. The capacitors are fully discharged approx. 10 minutes after disconnecting the electrical system from the battery.

Before starting maintenance on the electrical system:

- ▶ Only suitably trained electricians may operate on the truck's electrical system.
- ▶ Before working on the electrical system, take all precautionary measures to avoid electric shocks.
- ▶ Park the truck securely – see page 75.
- ▶ Disconnect the battery connector.
- ▶ Remove any rings, metal wristbands etc.

3.2 Consumables and used parts

⚠ CAUTION!

Consumables and used parts are an environmental hazard

Used parts and consumables must be disposed of in accordance with the applicable environmental-protection regulations. Oil changes should be carried out by the manufacturer's customer service department, whose staff are specially trained for this task.

- ▶ Note the safety regulations when handling these materials.

3.3 Wheels

⚠ WARNING!

The use of wheels that do not match the manufacturer's specifications can result in accidents

The quality of wheels affects the stability and performance of the truck.

Uneven wear reduces truck stability and increases the stopping distance.

- ▶ After replacing wheels, make sure the truck is not skewed.
- ▶ Always replace wheels in pairs, i.e. left and right at the same time.

When replacing wheels fitted at the factory, only use the manufacturer’s original spare parts. Otherwise the truck's rated performance cannot be ensured, see page 147.

4 Lubricants and Lubrication Schedule

4.1 Handling consumables safely

Handling consumables

Consumables must always be handled correctly. Follow the manufacturer's instructions.

⚠ WARNING!

Improper handling is hazardous to health, life and the environment

Consumables can be flammable.

- ▶ Keep consumables away from hot components and naked flames.
- ▶ Always keep consumables in prescribed marked containers.
- ▶ Always fill consumables in clean containers.
- ▶ Do not mix up different grades of consumable. The only exception to this is when mixing is expressly stipulated in the Operating Instructions.

⚠ CAUTION!

Spilled consumables can cause slipping and endanger the environment

Risk of slipping from spilled consumables. The risk is greater when combined with water.

- ▶ Do not spill consumables.
- ▶ Spilled consumables must be removed immediately with an appropriate bonding agent.
- ▶ The bonding agent / consumable mixture must be disposed of in accordance with regulations.

⚠ WARNING!

Improper handling of oils can be hazardous

Oils (chain spray / hydraulic oil) are flammable and poisonous.

- ▶ Dispose of used oils in accordance with regulations. Store used oil safely until it can be disposed of in accordance with regulations.
- ▶ Do not spill oil.
- ▶ Spilled oils must be removed immediately with an appropriate bonding agent.
- ▶ The mixture consisting of the bonding agent and oil must be disposed of in accordance with regulations.
- ▶ Observe national regulations when handling oils.
- ▶ Wear safety gloves when handling oils.
- ▶ Prevent oil from coming into contact with hot motor parts.
- ▶ Do not smoke when handling oil.
- ▶ Avoid contact and digestion. If you swallow oil do not induce vomiting but seek medical assistance immediately.
- ▶ Seek fresh air after breathing in oil fumes or vapours.
- ▶ If oil has come into contact with your skin, rinse your skin with water.
- ▶ If oil has come into contact with your eyes, rinse them with water and seek medical assistance immediately.
- ▶ Replace oil-soaked clothing and shoes immediately.

⚠ CAUTION!

Consumables and used parts are an environmental hazard

Used parts and consumables must be disposed of in accordance with the applicable environmental-protection regulations. Oil changes should be carried out by the manufacturer's customer service department, whose staff are specially trained for this task.

▶ Note the safety regulations when handling these materials.

4.2 Lubrication Schedule

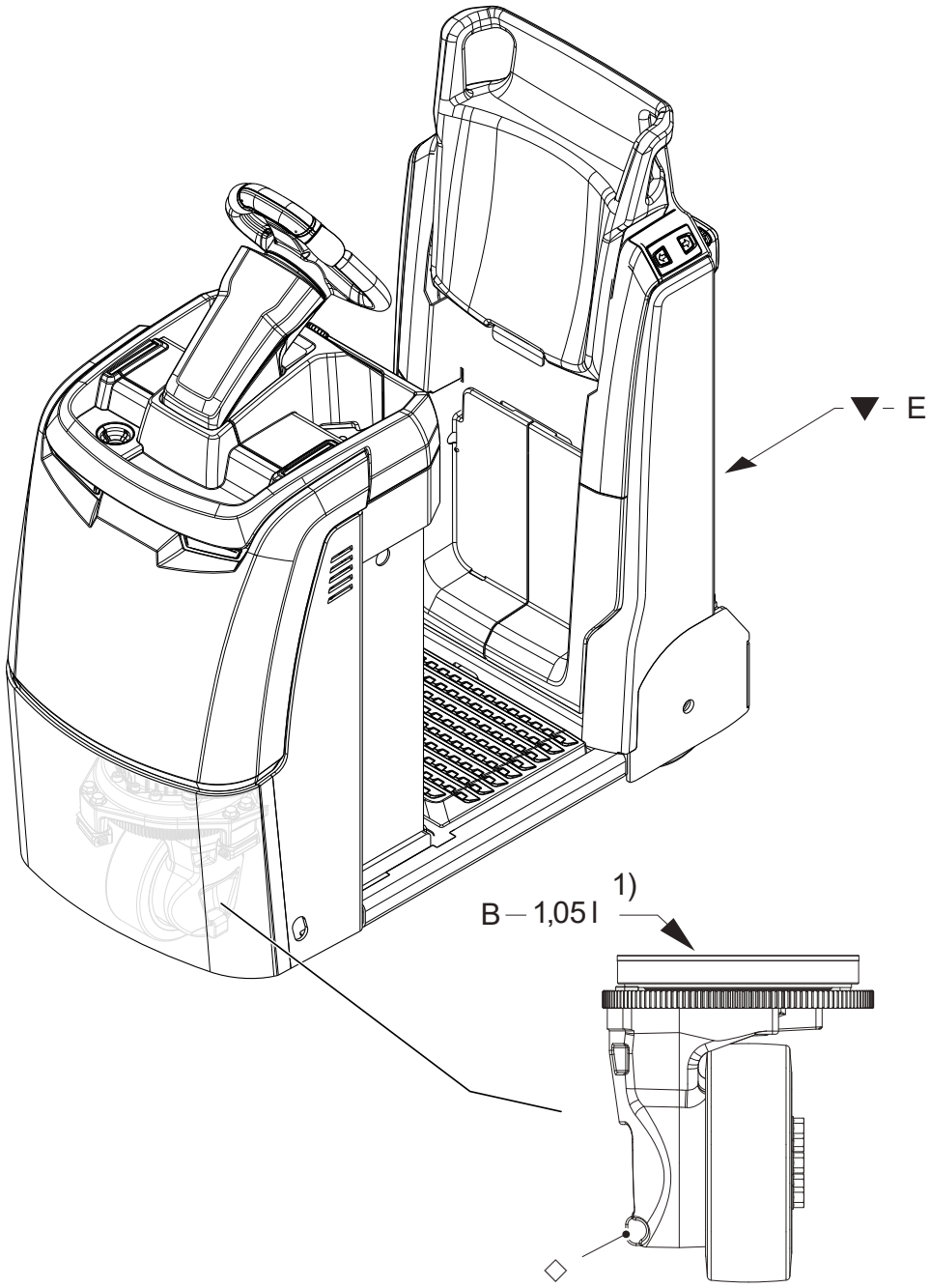

◆	Transmission-oil filler neck
◇	Transmission-oil drain plug

1 Gear oil values are guidelines only. The spur wheel should be dipped approx. 2 mm 2 mm in the transmission oil.

4.3 Consumables

Code	Order no.	Quantity	Description	Used for
B	50449961	5.0 l	75W-90	Transmission
E	29202050	1.0 kg	Grease, Polylub GA 352P	Lubrication

Grease guidelines

Code	Saponification	Dew point °C	Worked penetration at 25 °C	NLG1 class	Application temperature °C
E	Lithium	>220	280 - 310	2	-35/+120

* The trucks are factory-equipped with a special hydraulic oil (the Jungheinrich hydraulic oil with a blue colouration). The Jungheinrich hydraulic oil is available only from the Jungheinrich service department. The use of named alternative hydraulic oils is not prohibited, but may lead to a decline in functionality. The Jungheinrich hydraulic oil may be mixed with one of the named alternative hydraulic oils.

5 Maintenance and repairs

5.1 Preparing the truck for maintenance and repair work

All necessary safety measures must be taken to avoid accidents when carrying out maintenance and repairs. The following preparations must be made:

Procedure

- Park the truck on a level surface.
- Park the truck securely, see page 75.
- Disconnect the battery to prevent the truck from being switched on accidentally.
- When working under a raised lift truck, secure it to prevent it from lowering, tipping or sliding away.

⚠ WARNING!

Risk of accidents when working underneath the industrial truck

▶When working under a raised truck, secure it to prevent the truck from lowering, tipping or sliding away.

▶When raising the truck, follow the instructions, see page 29. When working on the parking brake, prevent the truck from accidentally rolling away (e.g. with chocks).

5.2 Lifting and jacking up the truck safely

⚠ WARNING!

Lifting and jacking up the truck safely

In order to raise the truck, the lifting gear must only be secured to the points specially provided for this purpose.

In order to raise and jack up the truck safely, proceed as follows:

- ▶ Jack up the truck only on a level surface and prevent it from moving accidentally.
- ▶ Always use a jack with sufficient capacity. When jacking up the burden carrier, take appropriate measures to prevent it from slipping or tipping over (e.g. wedges, wooden blocks).
- ▶ In order to raise the truck, the lifting accessories must only be secured to the points specially provided for this purpose, see page 29.

5.3 Cleaning

5.3.1 Cleaning the truck

Cleaning tasks may only take place in the designated locations, which adhere to the stipulations of the country of use.

⚠ CAUTION!

Fire hazard

Do not use flammable liquids to clean the industrial truck.

- ▶ Disconnect the battery before starting cleaning work.
- ▶ Carry out all necessary safety measures to prevent sparking before cleaning (e.g. by short-circuiting).

⚠ CAUTION!

Risk of component damage when cleaning the truck

Cleaning with a pressure washer can result in malfunctions due to humidity.

- ▶ Cover all electronic system assemblies (controllers, sensors, motors etc.) before cleaning the truck with a pressure washer.
- ▶ Do not hold the jet of the pressure washer by the marked points to avoid damaging them (see page 26).
- ▶ Do not clean the truck with pressurised water.

Requirements

– Truck prepared for maintenance and repair work – see page 153.

Tools and Material Required

– Water-based cleaning agents
– Sponge or cloth

Procedure

- Clean the surface of the truck with water-based solvents and water. Use a sponge or cloth to clean.
- In particular, clean the following areas:
  - Window(s)
  - Oil filler caps and their surroundings
  - Grease nipples (before lubrication)
- Dry the truck after cleaning, e.g. with compressed air or a dry cloth.
- Carry out all the tasks in the section "Recommissioning the truck after cleaning or maintenance work" – see page 161.

The truck is now clean.

5.3.2 Cleaning the electrical system assemblies

NOTICE

Risk of electrical-system damage

Cleaning the electronic system assemblies (controllers, sensors, motors etc.) with water can damage the electrical system.

▶ Do not clean the electrical system with water.

▶ Clean the electrical system with weak suction or compressed air (use a compressor with a water trap) and a non-conductive, anti-static brush.

Cleaning the electrical system assemblies

Requirements

– Truck prepared for maintenance and repair work (see page 153).

Tools and Material Required

– Compressor with water separator
– Non-conductive, antistatic brush

Procedure

- Expose the electrical system, see page 159.
- Clean the electrical system assemblies with weak suction or compressed air (use a compressor with a water separator) and a non-conductive, anti-static brush.
- Fit the electrical system panel, see page 159.
- Carry out all the tasks in the section "Recommissioning the truck after cleaning or maintenance work" (see page 161).

The electrical system assemblies are now clean.

5.4 Replacing the wheels

Wheels must only be replaced by authorised service personnel.

5.5 Tightening the wheel nuts

The wheel nuts on the drive wheel must be retightened in accordance with the maintenance intervals indicated in the maintenance checklist, see page 167.

Tightening the wheels nuts

Requirements

– Prepare the truck for maintenance and repair work, see page 153.

Tools and Material Required

– Torque wrench

Procedure

- Position the drive wheel (119) such that the wheel nuts (120) can be tightened through the assembly opening (121).
- Tighten all wheel nuts (120) using the torque wrench through the assembly opening (121) in the bumper.

  To do this, tighten the wheel nuts in the prescribed order.
  - First tighten with 10 Nm.
  - Then tighten with 150 Nm.

The wheel nuts have now been tightened.

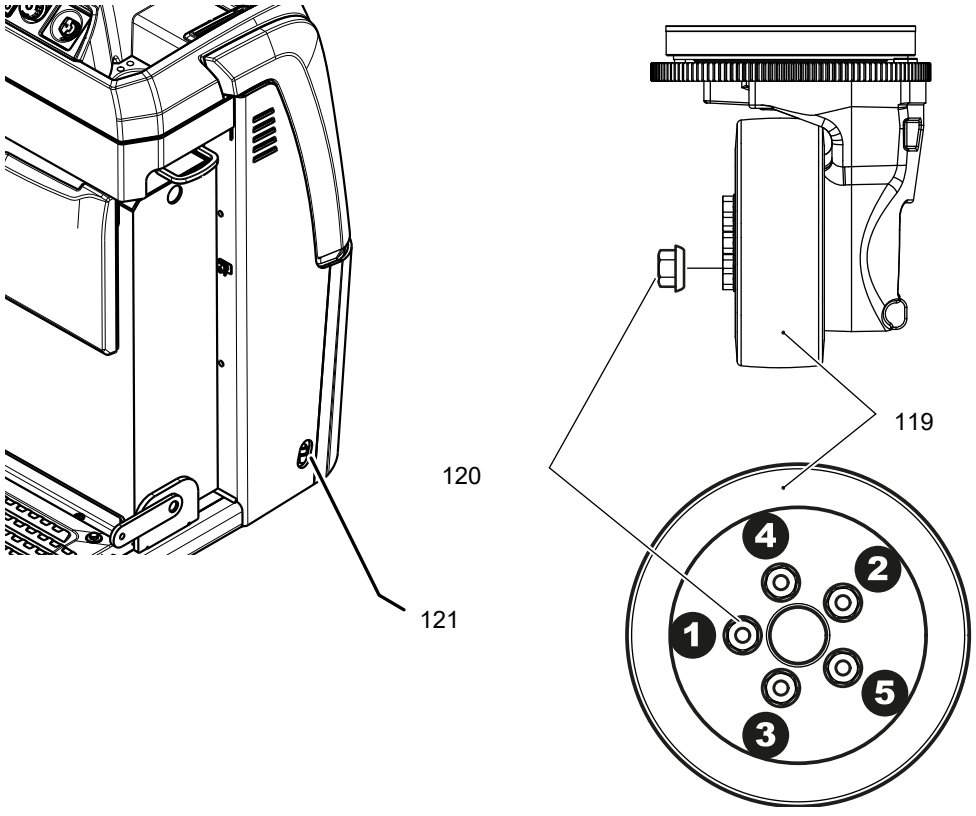

5.6 Disassembling or assembling the front panel

Front panel disassembly

Requirements

– Prepare the truck for maintenance and repairs – see page 153.

Procedure

➔ The front panel (81) is fitted to the truck chassis using retaining lugs (122).

- Carefully remove the front panel (81) from the truck chassis so that the retaining lugs (122) are fully extracted from the rubber buffers.
- Set down the front panel (81).

The front cover has been removed.

➔ Assembly is carried out in the reverse order.

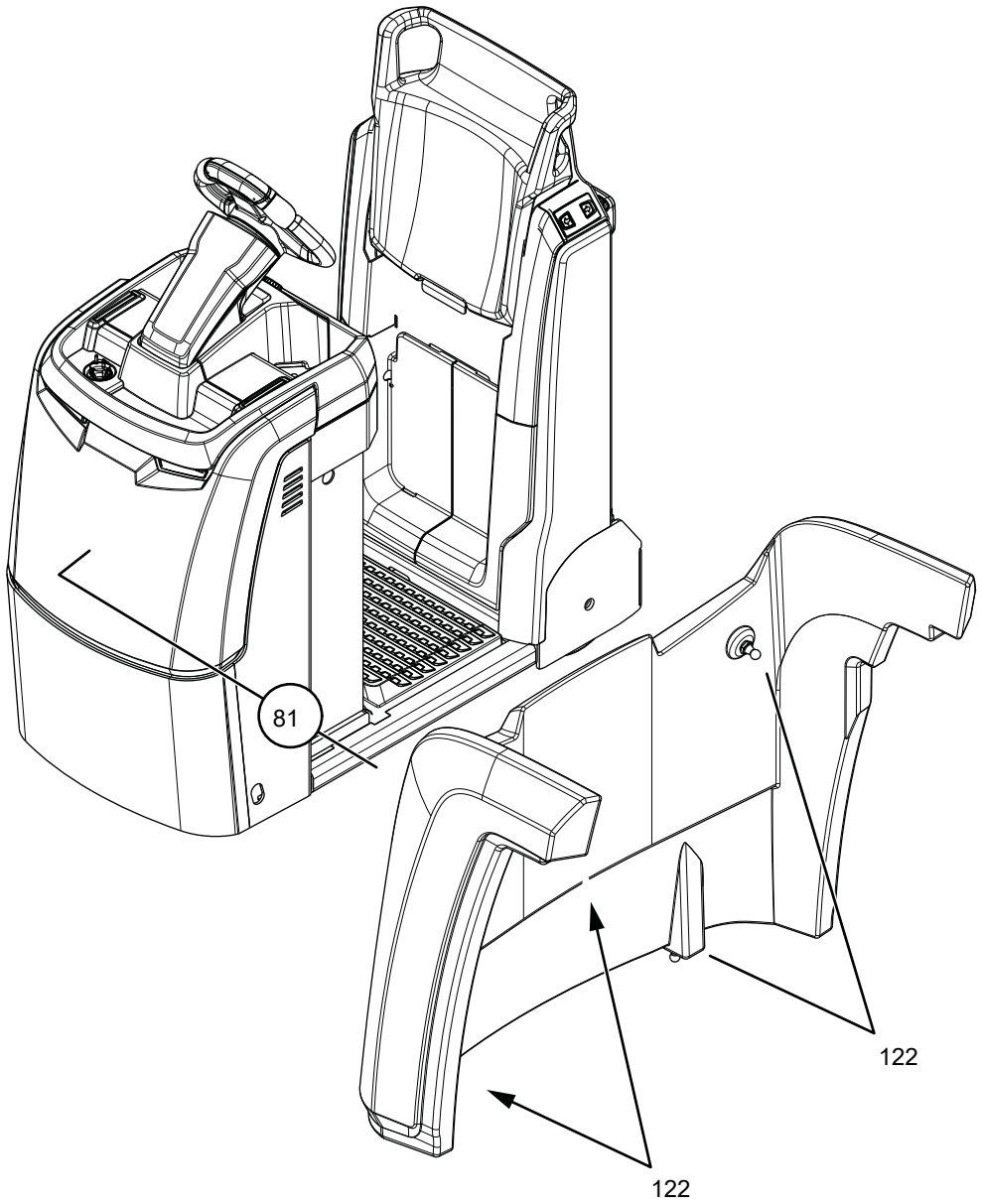

5.7 Checking the electrical fuses

Checking fuses

Requirements

– Truck prepared for maintenance and repair work, see page 153.
– Front panel removed, see page 159.

Procedure

• Check the fuse ratings against the table and their condition, and replace if necessary.

The fuses have been checked.

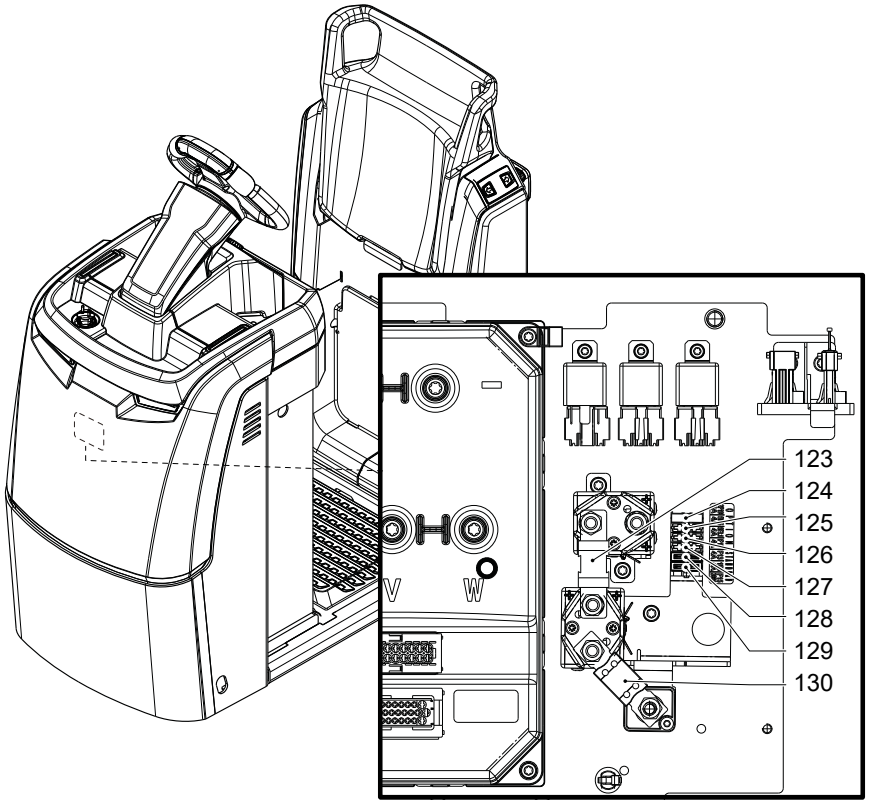

Item	Fuse	To protect	Rating
123	F18	Optional equipment - electrical trailer supply (○)	150 A
124	2F19	Optional equipment - trailer interface	4 A
125	5F5	Optional equipment - lighting (○)	4 A
126	5F1.3	Optional equipment - floor spot (○)	4 A
127	F17	Optional equipment - radio data (○)	4 A
128	F13	Brake /valves	4 A
129	1F9	Electronics	4 A
130	F15	Drive motor/control	300 A

5.8 Restoring the truck to service after maintenance and repairs

Procedure

- Thoroughly clean the truck – see page 155.
- Lubricate the truck according to the lubrication diagram, see page 151.
- On trucks with lead-acid batteries: Clean the battery, grease the terminals and connect the battery.
- Charge the battery, see page 55.
- Start up the truck, see page 72.

6 Decommissioning the Industrial Truck

If the truck is to be out of service for more than a month, it must be stored in a frost-free and dry room. All necessary measures must be taken before, during and after decommissioning as described hereafter.

When the truck is out of service it must be jacked up so that all the wheels are clear of the ground. This is the only way of ensuring that the wheels and wheel bearings are not damaged.

➔ Jack up the truck, see page 154.

If the truck is to be out of service for more than 6 months, agree further measures with the manufacturer's customer service department.

6.1 Prior to decommissioning

6.1.1 Trucks with lead-acid battery

Procedure

- Thoroughly clean the truck, see page 155.
- Prevent the truck from rolling away accidentally.
- Check the hydraulic oil level and replenish if necessary, see page 149.
- Apply a thin layer of oil or grease to any non-painted mechanical components.
- Lubricate the truck according to the lubrication schedule, see page 149.
- Charge the battery, see page 55.
- Disconnect the battery, clean it and grease the terminals.

➔ In addition, follow the battery manufacturer’s instructions.

6.1.2 Trucks with Lithium-Ion Battery

NOTICE

Damage to the lithium-ion battery due to discharge

If the lithium-ion battery is not used for a long period of time, it can become damaged through discharge.

▶ Fully charge the battery before extended downtimes.

▶ To ensure a long service life of the lithium-ion battery, it must be fully charged every 4 weeks when not in use.

Procedure

- Thoroughly clean the truck, see page 155.
- Prevent the truck from rolling away accidentally.
- Check the hydraulic oil level and replenish if necessary, see page 149.
- Apply a thin layer of oil or grease to any non-painted mechanical components.
- Lubricate the truck according to the lubrication diagram, see page 149.
- Charge the battery, see page 49.

6.2 Action to be taken during decommissioning

6.2.1 Trucks with lead-acid battery

NOTICE

Full discharge can damage the battery

Self-discharge can cause the battery to fully discharge. Full discharge shortens the useful life of the battery.

▶ Charge the battery at least every 2 months.

→ Charge the battery, see page 55.

6.2.2 Trucks with Lithium-Ion Battery

NOTICE

Damage to the lithium-ion battery due to discharge

If the lithium-ion battery is not used for a long period of time, it can become damaged through discharge.

▶ Fully charge the battery before extended downtimes.

▶ To ensure a long service life of the lithium-ion battery, it must be fully charged every 4 weeks when not in use.

→ Charge the battery, see page 49.

6.3 Restoring the truck to service after decommissioning

Procedure

- Thoroughly clean the truck – see page 155.
- Lubricate the truck according to the lubrication diagram, see page 151.
- On trucks with lead-acid batteries: Clean the battery, grease the terminals and connect the battery.
- Charge the battery, see page 55.
- Start up the truck, see page 72.

7 Safety tests to be performed at intervals and after unusual incidents

The truck must be inspected at least annually (refer to national regulations) or after any unusual event by a qualified inspector. The manufacturer offers a safety inspection service which is performed by personnel specifically trained for this purpose.

A complete test must be carried out on the technical condition of the truck with regard to safety. The truck must also be examined thoroughly for damage.

The operating company is responsible for ensuring that faults are rectified immediately.

8 Final de-commissioning, disposal

➔ Final de-commissioning or disposal of the truck in must be performed in accordance with the regulations of the country of use. In particular, regulations governing the disposal of batteries, consumables and electronic and electrical systems must be observed.

The truck must only be disassembled by trained personnel in accordance with the procedures as specified by the manufacturer.

9 Human vibration measurement

➔ Vibrations that affect the operator over the course of the day are known as human vibrations. Excessive human vibrations will cause the operator long term health problems. The European "2002/44/EC/Vibration" operator directive has therefore been established to protect operators. To help operators to assess the application situation, the manufacturer offers a service of measuring these human vibrations.

G Maintenance, Inspection and Changing of Maintenance Parts Requiring Replacement

⚠ WARNING!

Lack of maintenance can result in accidents

Failure to perform regular maintenance and inspections can lead to truck failure and poses a potential hazard to personnel and equipment.

▶Thorough and professionally carried out maintenance and inspection is one of the most important conditions for the safe use of the truck.

NOTICE

The application conditions of a truck have a considerable impact on component wear. The following service, inspection and replacement intervals are based on single-shift operation under normal operating conditions. The intervals must be reduced accordingly if the equipment is to be used in very dusty conditions, sharp temperature fluctuations or multiple shifts.

▶To prevent damage due to wear, the manufacturer recommends an on-site application analysis to agree on appropriate intervals.

The following chapter defines the tasks to be performed, the respective intervals to be observed and the maintenance parts for which replacement is recommended.

1 Maintenance Contents EZS 130

Issued on: 2025-08-28 7:30

1.1 Owner

To be performed every 50 service hours, but at least once a week.

1.1.1 Maintenance contents

1.1.1.1 Standard equipment

Brakes
Test the brake.

1.1.1.2 Optional Equipment

Lead-acid battery, international

Power supply
Correct the battery-acid level using demineralised water.

Lead-acid battery

Power supply
Correct the battery-acid level using demineralised water.

1.1.2 Inspection contents

1.1.2.1 Standard equipment

The following points must be checked:

Electrical system
Warning and safety equipment in accordance with the operating instructions
Functionality of display and controls
Test emergency disconnect switch and check for damage

Power supply
Check battery and battery components for damage
Battery connector for secure fit, functionality and damage

Travel
Check wheels for wear and damage

Chassis/structure
Industrial truck for damage and leaks
Check labels for legibility, completeness and plausibility
Check doors or covers for damage

1.1.2.2 Optional Equipment

The following points must be checked:

Standard on-board charger

Battery charger
Mains plug and mains cable for damage

Work lights

Electrical system
Test lighting and check for damage

Strobe light/warning beacon

Electrical system
Test strobe light/warning beacon and check for damage

On-board charger 35A

Battery charger
Mains plug and mains cable for damage

Daytime running light / lighting

Electrical system
Test lighting and check for damage

Lead-acid battery, international

Power supply
Check the battery cable connections for secure attachment
Check battery and battery components for damage

Warning zone lights, red/blue

Electrical system
Test lighting and check for damage

Lead-acid battery

Power supply
Check the battery cable connections for secure attachment

1.2 Customer Service

In accordance with the EZS 130 service interval, to be performed every 1000 service hours, but at least once a year.

1.2.1 Maintenance contents

1.2.1.1 Standard equipment

Brakes
Test the brake.

Electrical system
Test the contactors and/or relays.
Perform insulation inspection.

Chassis/structure
Check that the panels and covers as well as the floor plate with mounting brackets are secure. Ensure they function correctly and are safe.

Agreed services
Carry out a test run with the rated capacity or a customer-specific load.
Lubricate the truck according to the lubrication schedule.
Demonstration after maintenance.

1.2.1.2 Optional Equipment

Standard on-board charger

Battery charger
Test the immobiliser on trucks with an on-board charger.
Carry out a potential measurement on the chassis while charging is in progress.

Radio data

System components
Clean the scanner and terminal.

On-board charger 35A

Battery charger
Test the immobiliser on trucks with an on-board charger.
Clean the fan.
Carry out a potential measurement on the chassis while charging is in progress.

24V trailer electrical supply

Travel
Test the immobiliser on non-raised trailers.

Lead-acid battery, international

Electrical system
Perform insulation inspection.

Power supply
Clean the battery.
Clean and grease the battery terminals.
Measure acid density and battery voltage.
Correct the battery-acid level using demineralised water.

Lead-acid battery

Electrical system
Perform insulation inspection.

Power supply
Clean the battery.
Clean and grease the battery terminals.
Measure acid density and battery voltage.
Correct the battery-acid level using demineralised water.

1.2.2 Inspection contents

The following points must be checked:

1.2.2.1 Standard equipment

Electrical system
Cables and motor for secure fit and damage
Warning and safety equipment in accordance with the operating instructions
Functionality of display and controls
Test emergency disconnect switch and check for damage
Contactors and/or relays for wear and damage
Check electrical wiring for damage (insulation damage, connections) and check whether the fuse ratings are correct

Power supply
Battery latch and battery attachment for correct function and damage
Battery connector for secure fit, functionality and damage

Travel
Deadman switch for function and damage
Drive system bearings for wear and damage
Transmission for noise and leaks
Check wheels for wear, damage and secure mounting
Check wheel bearings and mounting of wheels for wear and damage

Chassis/structure
Industrial truck for damage and leaks
Check chassis connections and screw connections are securely attached and check for damage
Check labels for legibility, completeness and plausibility
Backrest and/or padding in the operator position for functionality and damage
Operator platform for damage
Check operator mat and steps are non-slip and free of damage

Steering
Electric steering and its components for function, wear and damage
Steering bearings, steering play and steering gear teeth or steering chain for wear and damage
Check the mechanical parts of the steering column for wear and damage

1.2.2.2 Optional Equipment

Standard on-board charger

Battery charger
Mains plug and mains cable for damage
Cables and electrical connections for secure fit and damage

Electrolyte recirculation

Power supply
Hose connections and pump for correct function

Aquamatic

Power supply
Aquamatic plug, hose connections and float for functionality and sealing
Flow indicator for functionality and sealing

Battery refill system

Power supply
Refill system for functionality and leaks

Trailer coupling

Chassis/structure
Test trailer coupling stop or tow mechanism stop and check for damage

Shock sensor/data recorder

Electrical system
Check shock sensor/data recorder is securely attached and check for damage

Radio data

System components
Scanner and terminal for secure fit, functionality and damage
Fuses for correct ratings
Check cables are securely attached and check for damage

Work lights

Electrical system
Test lighting and check for damage

Access module

Electrical system
Check access module is securely attached, test and check for damage

Optional controls

Electrical system
Ensure optional controls are present and plausible

Strobe light/warning beacon

Electrical system
Test strobe light/warning beacon and check for damage

Audible warning devices

Electrical system
Check buzzer/warning alarm is securely attached, test and check for damage

Discharge strap

Electrical system
Check presence of electrostatic discharge strap or chain and check for damage

On-board charger 35A

Battery charger
Mains plug and mains cable for damage
Fan for correct functionality and damage
Cables and electrical connections for secure fit and damage

Daytime running light / lighting

Electrical system
Test lighting and check for damage

24V trailer electrical supply

Electrical system
Contactors and/or relays for wear and damage
Check connections and cables are securely attached and check for insulation damage and other signs of damage
Electrical connection cables of the trailer for damage

Travel
Sensors/switches for secure fit, functionality and damage

Touch mode

Travel
Touch mode for correct functionality

Lead-acid battery, international

Power supply
Check battery, battery cables and cell connectors are securely attached and check for damage
Ensure safety labels are present and check for damage

Warning zone lights, red/blue

Electrical system
Test lighting and check for damage

Lead-acid battery

Power supply
Check battery, battery cables and cell connectors are securely attached and check for damage

1.2.3 Maintenance parts

The manufacturer recommends the replacement of the following maintenance parts at the specified intervals.

1.2.3.1 Standard equipment

maintenance part	service hours	months
Gear oil	10000	